AEMO
AUSTRALIAN ENERGY MARKET OPERATOR

Self Forecasting Technologies Workshop

February 2018

Agenda

Time	Item	Presenter Location
2.00pm – 2.10pm	Welcome and introduction	All AEMO Offices
2.10pm – 2.30pm	Program overview	Melbourne
2.30pm – 3.10pm	Session 1: **Self Forecasting Requirements**	Sydney
3.10pm – 3.20pm	Break	
3.20pm – 4.50pm	Session 2: **ARENA workshop**	All AEMO Offices
4.50pm – 5.00pm	Wrap-up	Melbourne

Our facilitators

SYDNEY

MELBOURNE

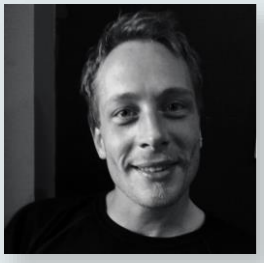

OTHER

Program Overview

Mike Davidson & Phil Cohn

Today's objectives

- **Inform stakeholders** on opportunities in self-forecasting trial
- **Invite feedback** on elements of the proposed AEMO IT interface
- **Explore options** for potential self-forecasting trial from wind and solar generators

Prior Work

Late 2015

- **AWEFS/ASEFS UIGF scheduling error** identified
- Proposed improvements to the process for developing Dispatch forecast

Feb - Dec 2016

- **Energy Conversion Model (ECM) guidelines consultation** held
- **Estimated Power (ESTP)** included as an **optional signal** in the ECM (Market Participant's 5-minute ahead UIGF)
- Detailed requirements & implementation plan not within the scope of the consultation
- Preference for **AEMO to work with industry** on development & implementation of wind & solar projects to produce their own output forecasts

2017

- **AWEFS and ASEFS working** group established
- ESTP discussed, however no formal reporting on this compiled or made available to date

2018:
ESTP has been rebranded as the **Market Participant 5-minute ahead Forecast**, or **MP5F**

Program Overview

- This program is a **collaboration between AEMO and ARENA** within their Memorandum of Understanding (MOU) established in May 2017.
- It will seek to **explore the potential of forecasting technologies to provide accurate site-specific forecasts**, via a series of proof-of-concept (POC) demonstrations at operating renewable energy generators in the NEM.
- There are two key elements of work:

1 Build and deploy IT AEMO interface

- **Design and build the systems to verify and accept participant self-forecasts** into AEMO's NEMDE.
- **Focus on submissions via Web API.** The infrastructure built for this project should support the possibility for participants and third party forecast providers to provide beyond 5-minute ahead forecasts.

Focus of Session 1

2 Build industry capability

- **Enable a set of proof-of-concept projects** implementing reliable self forecasts into AEMO systems.
- **Encourage a collective effort** to improve forecasts for intermittent generators.
- **Involve a mix of forecasting technologies** and generator sizes and types.

Focus of Session 2

Where we're going

INDICATIVE ONLY

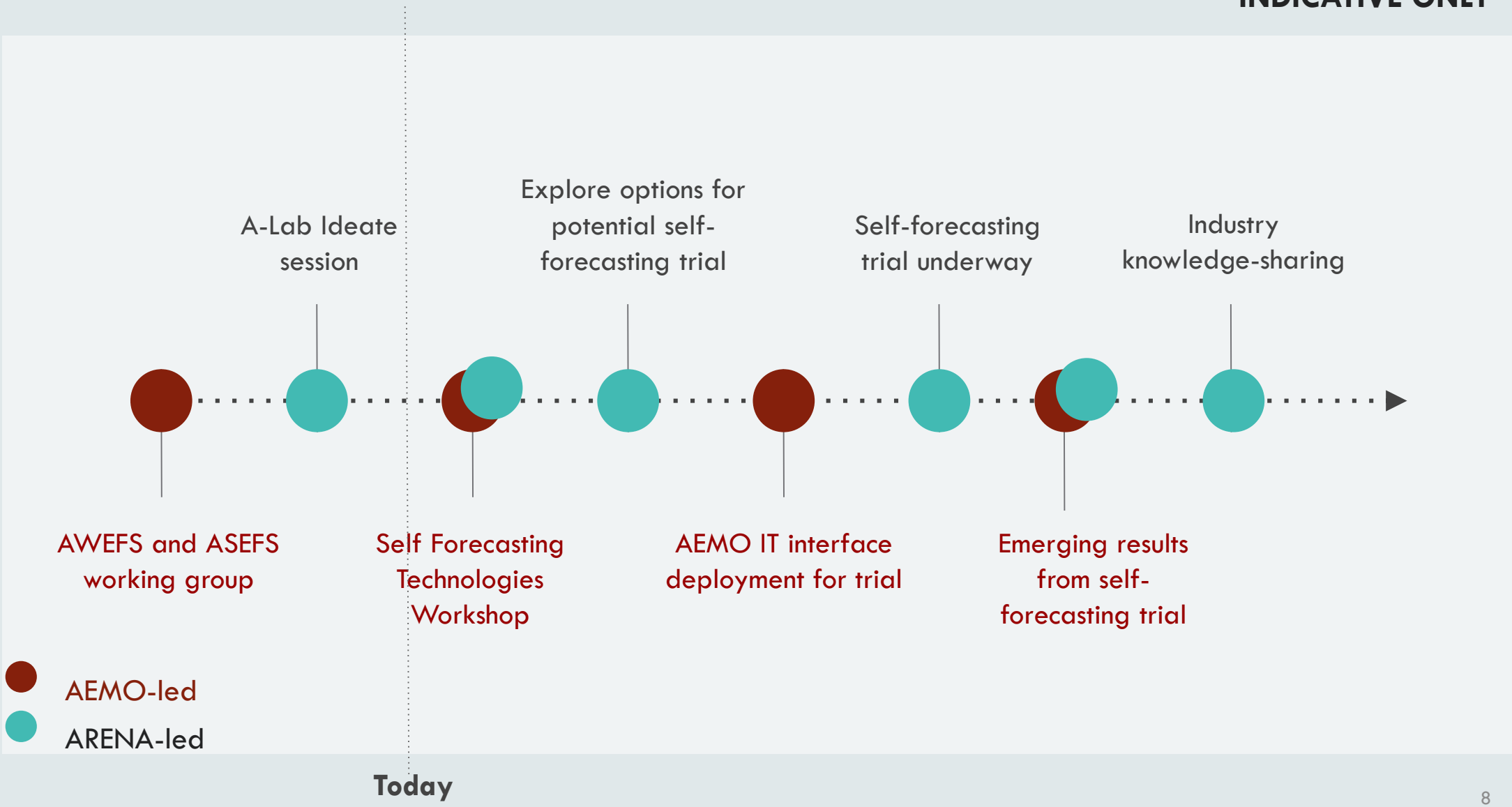

Motivation

- **Misalignment of NEM accountabilities**
- **Financial impacts on renewable generators**
- **System security challenges**

Benefits

- **Reduced FCAS costs**
- **Better PPAs**
- **Improved system security**
- **More renewable energy on the system**

Self Forecasting Requirements

Ross Gillett

UIGF and NER

National Electricity Rules **3.7B** relates to UIGF

- AEMO is responsible for preparing a forecast of available capacity for semi-scheduled units, called the Unconstrained Intermittent Generation Forecasts (UIGF)
- Inputs to UIGF include:
  - Forecasts of (wind/solar) energy available for input into electrical power conversion process
  - Energy Conversion Model (ECM) and its inputs
- To date, UIGFs are only produced by the ANEMOS forecasting systems (AWEFS/ASEFS)

Project in a Nutshell

CURRENT STATE	FUTURE STATE
AEMO uses ANEMOS forecasting systems (AWEFS/ASEFS) to produce forecasts	As current
Forecasts used in Dispatch, 5MPD, Pre-Dispatch, STPASA, MTPASA	As current
Dispatch forecasts largely based on SCADA provided by participant	As current, PLUS: **Participant can optionally submit their own Dispatch forecast (MP5F)**
AEMO validates the ANEMOS forecast: • Use ANEMOS forecast if valid; else • Use Active Power if valid; else • Use Previous Target	AEMO validates **the MP5F** and ANEMOS forecast: • **Use MP5F if valid; else** • Use ANEMOS forecast if valid; else • Use Active Power if valid; else • Use Previous Target
AEMO can manually disable the ANEMOS Dispatch forecast and use Active Power	As current, PLUS: **AEMO can manually disable the MP5F and use the ANEMOS Dispatch forecast or Active Power as req.**

Minimum Requirements

1. AEMO must be **able to receive** a MP5F submission from the participant and integrate it into its dispatch system
2. Participant will **validate** the quality of its MP5F (based on agreed set of minimum validations) and communicate that quality to AEMO
3. AEMO will **validate** both the MP5F and ANEMOS forecasts
4. AEMO will **use** a valid MP5F ahead of a valid ANEMOS forecast
5. AEMO will **report** each forecast and which is used
6. AEMO will **periodically monitor and report on** performance of both forecasts
7. AEMO will not use MP5F if **consistently worse** than ANEMOS forecast
8. AEMO will develop processes to **turn off** either or both forecasts

Data Submission & Structure

Submission

- Web API submission
- Scalable infrastructure → support the possibility for > 5-minute ahead forecasts
- Submission validated by AEMO before loading into database
- Participant must submit forecasts with enough time to be loaded and processed in the system
  - Initial forecast must be submitted 70 seconds before start of DI to guarantee use in Dispatch
- Participants can re-submit forecasts as often as required
- All subsequent submissions will overwrite older versions.

Structure

- **DUID**
- **Run_DateTime**
  Time forecast was created
- **Interval_DateTime** (DI ending)
  Time forecast applies
- **MP5F**
  Forecast Value (MW)
- **MP5F Quality**
  Forecast quality flag (binary value for use/ not use)

Question: Do you have any comments on the proposed data submission requirements?

Participant Validations

- Participant must validate own forecast before submission to AEMO
- If invalid, Participant submits forecast with Quality flag set to "not use", else flag set to "use"
- **Minimum validations by participant:**
  - Submission in valid format
  - Forecast within range (0 → Max Capacity)
  - Forecast not frozen (non-zero and changed within X intervals)
  - Forecast error has consistently better than benchmark:
    - 15-minute Mean Absolute Error > MW Error Threshold
    - Benchmark either:
      - Active Power (non-SDC intervals) and Possible Power (SDC intervals)
      - Possible Power (for all intervals)

Question: Do you have any comments on the proposed validations required by the Participant?

AEMO Validations

Submission checks:

- Valid format
- No missing data
- Submitted before the start of the relevant DI (no old forecasts)
- Submitted by the relevant participant

Participant Forecast checks:

- Forecast quality flag = "Use"
- Forecast within range (0 → Max Capacity)
- Forecast not frozen (non-zero and changed in X intervals)
  - BUT only if the participant does not perform this check themselves

Question: Do you have any comments on the proposed validation rules required by AEMO?

Real-time Validation/ Substitution logic - Current

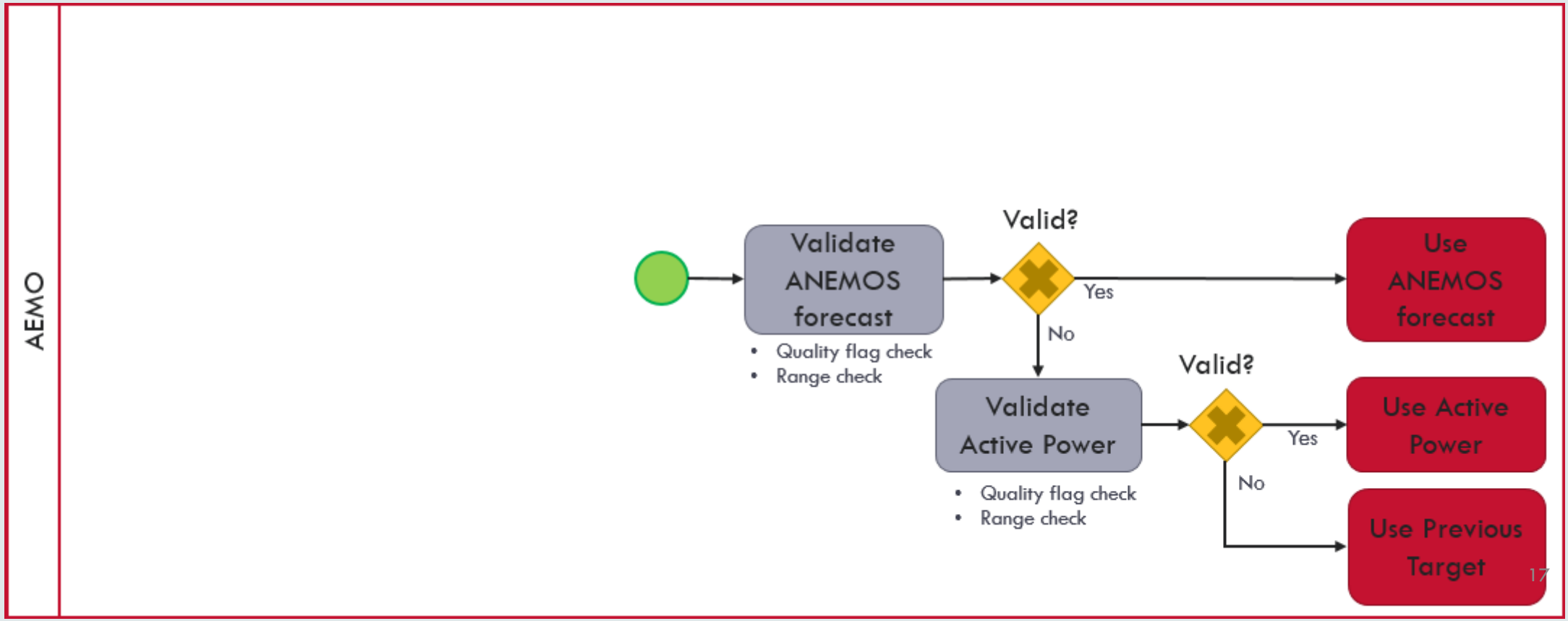

Real-time Validation/ Substitution logic - Future

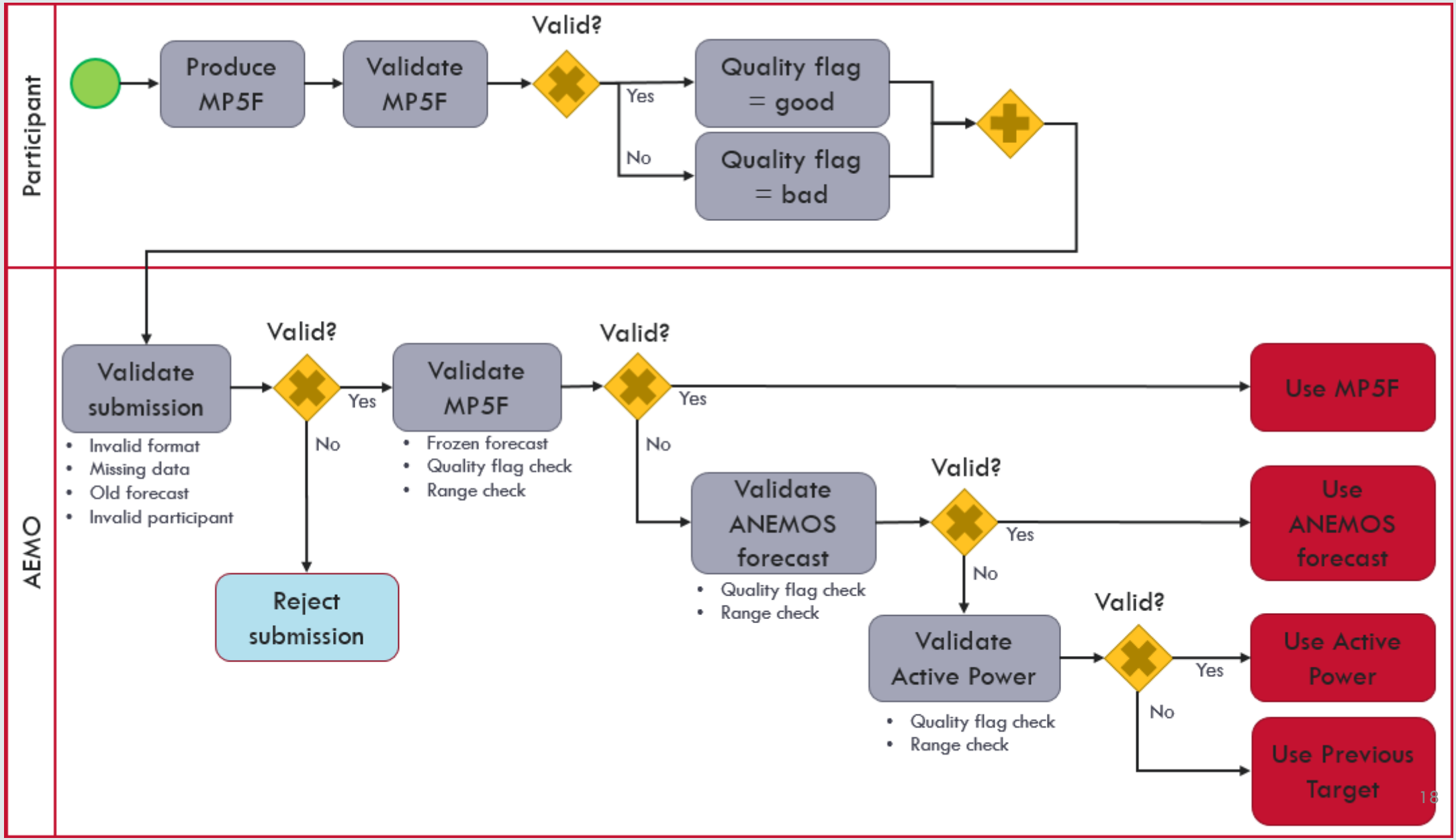

Real-time reporting

- AEMO sends confidential report to relevant participant every 5-minutes with:
  - DUID
  - Participant Forecast
  - Participant Forecast Quality Flag
  - ANEMOS Forecast
  - Which forecast was used in Dispatch
  - [optionally] Rolling Forecast Error for each Forecast

<u>Question</u>: What information above should AEMO also report to the public on the next day?

Offline Validation & Reporting

- AEMO assesses and reports forecast performance on weekly basis
  - Both MP5F and ANEMOS forecasts
  - Based on MAE
  - Separate measure during Semi-Dispatch Cap (SDC) & non-SDC intervals
  - Use SCADA Possible Power as benchmark during SDC intervals (or all?)

<u>Question</u>: Do you have any comments on the use of SCADA Possible Power as a performance benchmark for SCD intervals?

- What if the participant's MP5F is worse than ANEMOS forecast?
  - AEMO will notify the participant of its performance assessment
  - If participant does not adequately address performance within agreed timeframes, AEMO may elect to turn off the participant MP5F

Feedback

Next steps to provide feedback

- Provide written feedback by COB Friday, 23 February 2018
- Send to op.forecasting@aemo.com.au
- When providing feedback, reference the specific question from this presentation that you are answering, or use the template ('Self Forecasting Requirements – Feedback') provided in the meeting pack.

AEMO

AUSTRALIAN ENERGY MARKET OPERATOR