FRC B2B System Interface Definitions

For the SA and WA Gas Retail Markets

PREPARED BY: AEMO Markets

VERSION: 4.~~6~~7

EFFECTIVE DATE: TBA

STATUS: FINAL

VERSION RELEASE HISTORY

Version	Effective Date	Author(s)	Summary of Changes
0.1	30/9/03	C. Madden	Worked example to demonstrate approach
0.2	1/10/03	C. Madden	Updated based on output from SA S2B Working Group
0.3	2/10/03	B. Eaves	Updated following initial Q/A and feedback from participants
0.4	21/10/03	B. Eaves	Updated following workshop and comments received from the B2B Working Group.
1.0	31/10/03	B. Eaves	Updated following review by SA/WA B2B Working Group:
2.0	17/11/03	B. Eaves	• Section 4.5 Network Billing added • aseXML examples updated • References to Victorian transactions 31, 31A and 31B corrected. • Inclusion of generic event codes in transaction tables • 4.1.2.1 – Modifications to usage comments for RB_Reference_Number • 4.1.5 – Removal of paragraphs in relation to 'current user' • 4.1.7 – Modification to diagram to show 'no change' process flow. • 4.1.8 – Clarifications of differences between SA and WA. Added text re: use of Account Creation for interval meters. • 4.2.2.1 – Modifications to usage comments • 4.3.2.3 – Addition of error code 3680 • 4.3.2.6 – Modification to usage notes re CustomerCharacterisation. • Appendix A – Addition of Network Billing Data Elements • Addition of codes for Job Enquiry, Job Completion and Meter Position • Addition of Allowed Values for 'DistributionTariff' • Minor wording and formatting corrections • Addition of Allowed Values for 'Market' • Addition of description for "ProposedRead/IndexValue' • Appendix B – Additional introductory text • Appendix C – Modification of severity for error code 3680
2.01	24/11/03	B. Eaves	Version control issue management

Version	Effective Date	Author(s)	Summary of Changes
2.2/2.9	22/12/03 19/1/04	B. Eaves	• Front page reformatted. • Minor wording changes in reference to original VENCorp documents. • 4.2.2. Additional text re: different types of service orders. • 4.2.2.1. and 4.2.2.2. Modifications to usage notes including COC number, plumber's licence number and ServiceOrderNumber (also reflected in Appendix A) • 4.3.2.1. Terms 'active and blocked' changed to 'commissioned and decommissioned' • 4.3.2.3. Transmission Zone, Heating Value Zone, MIRN Status and Meter Status changed from Mandatory to Optional and usage notes for data elements amended to show differences between single and multiple MIRN responses. • 4.3.2.3. Usage notes amended to show that House Number 2, House Number Suffix 3, etc are not used in WA (this has also been reflected in Appendix 1.) • 4.5.2. Modifications to description of network billing dispute process • Appendix A. Additional data elements used in non-automated electronic files (Appendix E) added. • Appendix A. Notes show that Customer Characterisation is not used in WA. • Appendix A. Notes for Job Completion Codes and Job Enquiry Codes now cross-reference to REMCo Information Pack. • Appendix A. Additions to usage notes for StartWorkNoticeNumber in WA. • Appendix A. Additions to usage notes for Meter_Status to show that it is not used in WA. • Appendix A. Additions to usage notes for Type of Read to show that Customer Own Read is not used in WA. • Modifications to headings of csv data dictionary (to align with ICD and csv file format document). • Appendix E. New appendix with definitions of electronic files (not carried via aseXML). • Appendix A Clarification to MIRN Status Definitions • Appendix A cross reference to aseXML schema for address elements • aseXML examples and diagrams updated and introduction amended.

Version	Effective Date	Author(s)	Summary of Changes
3.0	19/3/04	B. Eaves	• Addition of two dispute codes (MDQ= MDQ is different and RDFG = Rate is different) to Appendix A csv data elements. • 1.3.1. Additional cross-reference to Service Order Specifications. • 4.1.1. Text added to indicate that (apart from AccountCreationNotification) these transactions are not used for interval meter data. • 4.1.6. Clarification of special read process in relation to inability to obtain special read for a move-in due to no-access. • Appendix A csv data elements. Logical length of 'rate' changed to 11,2. • Appendix A csv data elements. Addition of 'Paid_Date' • Appendix A csv data elements. Addition of GST_Exclusive_Amount_Paid (previously omitted). • Appendix A aseXML data elements. Changes to allowed values for AdjustmentReasonCode. • Appendix A aseXML data elements – amended cross-reference for JECs and JCCs to refer to Service Order Specifications in the REMCo Specification Pack. • Appendix C. Severity of error codes relating to multiple MIRN discovery responses changed to 'Information'. • 4.2.3. Inserted text re: processes for I&C customers in SA. • 4.2.3.4. Usage notes for COC number amended. • 4.2.3.4 Usage notes for ContactDetails and SORDSpecialComments amended for SA • 4.2.3.5. Additional elements added to Service Order Response for WA. • 4.2.3.4 and 4.2.3.5 Amended cross-reference to refer to Service Order Specifications in the REMCo Specification Pack • 4.2.3.5 Modified usage notes for AppointmentDetail/ Preferred/ Date in WA • 4.2.3.5 aseXML examples corrected • 4.3.2. Modified usage notes for ExcludedServicesCharges elements for WA • 4.3.2.3. Changes to usage notes for 'additional data to follow' for multiple responses. • 4.4.3.1. Minor correction to text in table. • 4.4.3.1. Modification to Customer_Characterisation usage notes. • 2.2 Addition of billing transactions to table (omitted in previous version) • Appendix E. • Meter_Status changed from mandatory to optional in Energy History Response. Usage notes amended. • New transaction 'Interval Meter Energy History Response' added. • Addition of 'Peak Rate' to Interval_Meter_Data and to csv data elements • Addition of text to Section 4.2 to explain different types of service orders and implications for business processes etc.

Version	Effective Date	Author(s)	Summary of Changes
3.1	10/5/04	B.Eaves	• Appendix A, CSV Data Elements. Length of Daily Heating Value changed from 4,2 to 5,3 (B2B CR1) • 4.5.2.1 Usage notes for Old_Transaction_ID and Old_Invoice_Number amended to include 'Optional if Adjustment_Indicator is set to "R" for re-bill' in all transactions (B2B CR2 – with modifications agreed at B2B WG Mtg 16/4/04). • Section 4. Specification for 'Time Formats' added to introduction (B2B CR3) – also in Introduction to Appendix A CSV elements. • Appendix E. 'State-Or_Territory' and 'Postcode' added as optional elements to Refresh of New Street Listing for MIRN Discovery transaction (B2B CR4). • Appendix A, CSV Data Elements. Clarification notes added to 'Current_Read_Date and Previous_Read_Date for interval meteres (B2B CR5). • 4.2.3.4. Usage notes amended for WA usage of COCNumber, LoadDetailsPerHour, PlumberLicenceNumber and StartWorkNoticeNumber (B2B CR9). • 4.2.3.5 Modifications to usage notes for access details in WA. • 4.3.2.5 'NMIWithChecksum' changed to 'NMI' to correct error. aseXML example also modified. • 4.1.2.1 & Appendix A – CSV elements – Change to usage notes for Meter-Status for WA. • Appendix F – Unstructured transactions added. • 4.3.2.3 MIRNDiscovery Response transaction for interval meters corrected • 4.5.2 Notes added to Tariff D and V files as defined in B2B CR8. • Appendix A. Added usage notes for Distribution Tariff and Network Tariff Code as per CR8
3.2	1/6/05	REMCo	• 4.5.2.1 Network Billing – addition of comments for the DisputeResolution transction in accordance with change request C20/04S. • Amendments to Sections 4.1.6.2, 4.2.3.5, 4.5.2.1 and Appendices A, C and E in accordance with Rule Change C05/04S.
3.3	1/10/10	T Sheridan	Updated to reflect the relevant Market Operator requirements following the transfer of REMCo's SA retail market operations to AEMO
3.4	30/7/12	S Macri	IN027/11 Customer Classification (NECF changes)
3.5	1/2/13	S Macri	Update to include SA Only changes: • IN008/10 – South Australian Crossed Meter Process • IN008/12 – South Australian Tariff D incorrect referencing • IN011/11 – South Australian MIRN Checksum update • IN006/12 – South Australian RoLR Requirement

Version	Effective Date	Author(s)	Summary of Changes
3.6	1/1/14	D.McGowan	Update to include SA Only changes: • IN026/12 – SA RoLR Automation • IN015/13 – (Residual RMP and Spec Pack changes for SA RoLR) • IN004/12 – (Redundant provision and minor GIP and Spec Pack changes)
3.7	1/7/14	T. Sheridan	Update to include SA Only changes: IN039/12 – MHA and MRT Service Orders
3.8	22/4/15	T.Sheridan	Update to include WA Only changes: C03/14S – Bulk Energy History Requests
3.9	14/9/2015	N.Datar	Update to include SA Only changes: IN006/09 – JCC combination and Service Order Response additional comment field
4.0	31/10/16	D. McGowan	Update to include: WA • C02/16C – REMCo to AEMO transition changes. SA • IN029/16 – REMCo to AEMO transition
4.1	16/11/16	N.Datar	Update to include SA Only changes: • IN031/11 – Fast Track process for release of Address enumerations
4.2	29/09/2017	N Datar	Update to include SA only changes IN039/16 – Harmonisation of T900 Password Protection
4.3	04/12/2017	D.McGowan	IN026/26 and includes IN021/15 and IN017/10 (SA only)
4.4	29/03/2019	N Datar	Update to include WA only change IN003/18W – Address Attributes
4.5	20/09/2019	N Datar	Update to include WA only change IN004/18W – Complete MIRN Listing

4.6	TBA	D.McGowan	IN006/17 – SA RMP harmonisation changes. These include:
			• In 4.5.2.1 and Appendix A replace the words RMR with RMP for the data field Network Tariff.
			• In Appendix D, added SA RMP clause numbers to the table of transaction
			• In Appendix E, added transaction 299 (Complete MIRN Listing (SA))
			• In Appendix F, added The following SA Unstructured Transactions
			  o Allocation of numbers for MIRNS
			  o Request to provide shipper details
			  o Interval-metered withdrawals depart from the allowable variable

4.7		D. McGowan and A. Pathy	IN003/20 - Adoption of the two B2B Life Support (LS) transactions including adopting a version of the aseXML schema that contain these LS transactions.

This document was originally based on 'Participant Build Pack 3 - B2B System Interface Definitions' version 1.5 published by VENCorp (now AEMO) on 26th August 2002.

Table of Contents

1. Introduction 15
1.1. Purpose 15
1.2. Audience 15
1.3. Related Documents 15
1.3.1. South Australia and Western Australia 15
1.3.2. Victoria 15
1.4. Definitions and Acronyms 16
1.5. Overview and Structure 17
1.6. Examples of aseXML code 17
2. Overview of Interfaces 18
2.1. Overview 18
2.2. Scope 18
3. Generic Interfaces 19
4. Specific Interfaces 20
4.1. Meter Reads – Energy and Consumption 20
4.1.1. Overview 20
4.1.2. Provision of Energy Flow Data 22
4.1.2.1. MeterDataNotification 24
4.1.2.2. MeterDataResponse 28
4.1.3. Missing Energy Data 31
4.1.3.1. MeterDataMissingNotification 33
4.1.4. Meter Read Input (SA Only) 35
4.1.4.1. MeterReadInputNotification (SA only) 37
4.1.5. Special Reads 39
4.1.5.1. SpecialReadRequest 43
4.1.5.2. SpecialReadResponse 45
4.1.6. Meter Data Verification 51
4.1.6.1. MeterDataVerifyRequest 53
4.1.6.2. MeterDataVerifyResponse 55
4.1.7. Account Creation 58
4.1.7.1. AccountCreationNotification 59
4.2. Service Orders 65
4.2.1. Overview 65
4.2.2. Service Orders Generated by Users 67
4.2.3. Alternative Service Order Scenarios 72
4.2.3.1. If the Work Actually Performed Differs from that Requested 72
4.2.3.2. Implied Service Orders 72
4.2.3.3. Service Orders Generated by a Network Operator 73
4.2.3.4. ServiceOrderRequest 73
4.2.3.5. ServiceOrderResponse 88
4.3. MIRN Discovery 101
4.3.1. Overview 101

4.3.2. Provision of MIRN Data 102
4.3.2.1. MIRN Discovery (Provision of MIRN Data from Address Search) 102
4.3.2.2. NMIDiscoveryRequest 104
4.3.2.3. NMIDiscoveryResponse (WA – sceham R13) 106
4.3.2.3A NMIDiscoveryResponse (SA – schema R29) 118
4.3.2.4. MIRN Standing Data (Provision of MIRN Data from MIRN Search) 131
4.3.2.5. NMIStandingDataRequest 133
4.3.2.6. NMIStandingDataResponse 134
4.4. Route and Site Information 141
4.4.1. Overview 141
4.4.2. Site Access Information 141
4.4.2.1. AmendMeterRouteDetails/AmendSiteAccessDetails 143
4.4.3. Site Address Information 146
4.4.3.1. AmendMeterRouteDetails/CSVAmendSiteAddressDetails 147
4.5. Network Billing 152
4.5.1. Overview 152
4.5.2. Network DUoS Billing Details 152
4.5.2.1. NetworkDUoSBillingNotification 155
4.6. Customer Details Information (SA Only) 171
4.6.1. Overview 171
4.7. Life Support Information (SA Only) 176
4.7.1. Overview 176
4.7.2. LifeSupportNotification (T80 and T81) 177
4.7.3. LifeSupportRequest (T82 and T83) 183
Appendix A. Data Dictionary 185
aseXML Data Elements 185
CSV Data Elements[1] 204
Appendix B. aseXML Standard Event Codes 224
Appendix C. Gas FRC Application Event Codes 226
Appendix D. Table of Transactions Cross-Reference 229
Appendix E. Non Automated Electronic Files 236
Overview 236
Energy History Request (T45) 237
Bulk Basic Metered Energy History Request (T45A) 237
Energy History Response (T46) 238
Interval Meter Energy History Response 239
Amend Customer Details Six Monthly Refresh (T71) – Not used in WA 240
Annual Meter Reading Schedule (T74) 241
Meter Reading Route Change (T75) 242
Time Expired Meters Notification (Routine Meter Change in WA) (T136) 242
Standing Data Change From Network Operator (T289) 243
Refresh of New Street Listing for MIRN Discovery (T298) 244

Notification of Planned Outage (T330) – Not used in WA. 250
Meter Range Updates (T333) – Not used in WA. 250
Interval Meter Data 252
Appendix F. Unstructured Transactions 257
Appendix G. RoLR Process (SA Only) 260
~~FRC B2B System Interface Definitions 1~~
~~For the SA and WA Gas Retail Markets 1~~
~~1. Introduction 13~~
~~1.1. Purpose 13~~
~~1.2. Audience 13~~
~~1.3. Related Documents 13~~
~~1.3.1. South Australia and Western Australia 13~~
~~1.3.2. Victoria 13~~
~~1.4. Definitions and Acronyms 14~~
~~1.5. Overview and Structure 15~~
~~1.6. Examples of aseXML code 15~~
~~2. Overview of Interfaces 16~~
~~2.1. Overview 16~~
~~2.2. Scope 16~~
~~3. Generic Interfaces 17~~
~~4. Specific Interfaces 18~~
~~4.1. Meter Reads – Energy and Consumption 18~~
~~4.1.1. Overview 18~~
~~4.1.2. Provision of Energy Flow Data 20~~
~~4.1.2.1. MeterDataNotification 22~~
~~4.1.2.2. MeterDataResponse 26~~
~~4.1.3. Missing Energy Data 28~~
~~4.1.3.1. MeterDataMissingNotification 30~~
~~4.1.4. Meter Read Input (SA Only) 31~~
~~4.1.4.1. MeterReadInputNotification (SA only) 33~~
~~4.1.5. Special Reads 35~~
~~4.1.5.1. SpecialReadRequest 38~~
~~4.1.5.2. SpecialReadResponse 41~~
~~4.1.6. Meter Data Verification 47~~
~~4.1.6.1. MeterDataVerifyRequest 49~~
~~4.1.6.2. MeterDataVerifyResponse 51~~
~~4.1.7. Account Creation 53~~
~~4.1.7.1. AccountCreationNotification 55~~
~~4.2. Service Orders 59~~
~~4.2.1. Overview 59~~
~~4.2.2. Service Orders Generated by Users 61~~

~~4.2.3. Alternative Service Order Scenarios ... 66~~
~~4.2.3.1. If the Work Actually Performed Differs from that Requested ... 66~~
~~4.2.3.2. Implied Service Orders ... 66~~
~~4.2.3.3. Service Orders Generated by a Network Operator ... 67~~
~~4.2.3.4. ServiceOrderRequest ... 67~~
~~4.2.3.5. ServiceOrderResponse ... 78~~
~~**4.3. MIRN Discovery ... 90**~~
~~4.3.1. Overview ... 90~~
~~4.3.2. Provision of MIRN Data ... 91~~
~~4.3.2.1. MIRN Discovery (Provision of MIRN Data from Address Search) ... 91~~
~~4.3.2.2. NMIDiscoveryRequest ... 93~~
~~4.3.2.3. NMIDiscoveryResponse (WA – sceham R13) ... 96~~
~~4.3.2.3A NMIDiscoveryResponse (SA – schema R29) ... 106~~
~~4.3.2.4. MIRN Standing Data (Provision of MIRN Data from MIRN Search) ... 117~~
~~4.3.2.5. NMIStandingDataRequest ... 119~~
~~4.3.2.6. NMIStandingDataResponse ... 120~~
~~**4.4. Route and Site Information ... 124**~~
~~4.4.1. Overview ... 124~~
~~4.4.2. Site Access Information ... 124~~
~~4.4.2.1. AmendMeterRouteDetails/AmendSiteAccessDetails ... 126~~
~~4.4.3. Site Address Information ... 128~~
~~4.4.3.1. AmendMeterRouteDetails/CSVAmendSiteAddressDetails ... 130~~
~~**4.5. Network Billing ... 135**~~
~~4.5.1. Overview ... 135~~
~~4.5.2. Network DUoS Billing Details ... 135~~
~~4.5.2.1. NetworkDUoSBillingNotification ... 138~~
~~**4.6. Customer Details Information (SA Only) ... 153**~~
~~4.6.1. Overview ... 153~~
~~**Appendix A. Data Dictionary ... 159**~~
~~**aseXML Data Elements ... 159**~~
~~**CSV Data Elements[1] ... 172**~~
~~**Appendix B. aseXML Standard Event Codes ... 191**~~
~~**Appendix C. Gas FRC Application Event Codes ... 193**~~
~~**Appendix D. Table of Transactions Cross-Reference ... 196**~~
~~**Appendix E. Non Automated Electronic Files ... 202**~~
~~**Overview ... 202**~~
~~**Energy History Request (T45) ... 203**~~
~~**Bulk Basic Metered Energy History Request (T45A) ... 203**~~
~~**Energy History Response (T46) ... 204**~~
~~**Interval Meter Energy History Response ... 205**~~
~~**Amend Customer Details Six Monthly Refresh (T71) – Not used in WA ... 206**~~
~~**Annual Meter Reading Schedule (T74) ... 207**~~
~~**Meter Reading Route Change (T75) ... 208**~~

~~Time Expired Meters Notification (Routine Meter Change in WA) (T136) ..... 208~~
~~Standing Data Change From Network Operator (T289) ..... 209~~
~~Refresh of New Street Listing for MIRN Discovery (T298) ..... 209~~
~~Notification of Planned Outage (T330) – Not used in WA ..... 210~~
~~Meter Range Updates (T333) – Not used in WA ..... 211~~
~~Interval Meter Data ..... 212~~
~~Appendix F. Unstructured Transactions ..... 216~~
~~Appendix G. RoLR Process (SA Only) ..... 218~~

Table of Figures

Figure 4-1 Provision of Energy Flow Data Activity Diagram ..... 22~~20~~
Figure 4-2 Meter Data Notification Sequence Diagram ..... 23~~21~~
Figure 4-3 Meter Data Response Sequence Diagram ..... 24~~21~~
Figure 4-4 MeterDataNotification aseXML schema ..... 27~~25~~
Figure 4-5 MeterDataResponse aseXML schema ..... 30~~27~~
Figure 4-6 Missing Meter Data Activity Diagram ..... 32~~28~~
Figure 4-7 Missing Meter Data Sequence Diagram ..... 32~~29~~
Figure 4-8 MeterDataMissingNotification aseXML schema ..... 35~~31~~
Figure 4-9 Meter Read Input Activity Diagram ..... 36~~32~~
Figure 4-10 Meter Read Input Sequence Diagram (SA only) ..... 36~~32~~
Figure 4-11 MeterReadInputNotification aseXML schema ..... 38~~34~~
Figure 4-12 Special Reads Activity Diagram ..... 39~~35~~
Figure 4-13 Special Read Cancellation Activity Diagram ..... 40~~36~~
Figure 4-14 Special Read Initiation Sequence Diagram ..... 41~~37~~
Figure 4-15 Special Read Cancellation Sequence Diagram ..... 41~~37~~
Figure 4-16 Special Read Closure (No Access) Sequence Diagram ..... 42~~38~~
Figure 4-17 GasSpecialReadNoAccess type aseXML schema ..... 47~~43~~
Figure 4-18 Meter Data Verification Activity Diagram ..... 51~~47~~
Figure 4-19 Meter Data Verification Request Sequence Diagram ..... 51~~47~~
Figure 4-20 Meter Data Verification Response Sequence Diagram ..... 52~~48~~
Figure 4-21 MeterDataVerifyRequest aseXML schema ..... 54~~50~~
Figure 4-22 GasMeterVerifyRequestData type aseXML schema ..... 54~~50~~
Figure 4-23 MeterDataVerifyResponse aseXML schema ..... 56~~52~~
Figure 4-24 GasMeterVerifyResponseData type aseXML schema ..... 57~~52~~
Figure 4-25 Account Creation Activity Diagram ..... 58~~54~~
Figure 4-26 Account Creation Sequence Diagram ..... 59~~54~~
Figure 4-27 AccountCreationNotification aseXML schema ..... 62~~56~~
Figure 4-28 Service Orders Normal Activity Diagram ..... 67~~61~~
Figure 4-29 Service Orders Cancellation Activity Diagram ..... 68~~62~~
Figure 4-30 Service Order Initiation Sequence Diagram ..... 69~~63~~
Figure 4-31 Service Order Cancellation Sequence Diagram ..... 69~~63~~
Figure 4-32 Service Order Closure Sequence Diagram ..... 71~~65~~
Figure 4-33 ServiceOrderRequest aseXML schema ..... 83~~74~~
Figure 4-34 GasServiceOrderType type aseXML schema ..... 84~~74~~
Figure 4-35 GasServiceOrderDetails type aseXML schema ..... 85~~75~~
Figure 4-36 ServiceOrderResponse aseXML schema ..... 95~~84~~
Figure 4-37 GasServiceOrderNotificationData type aseXML schema ..... 96~~85~~
Figure 4-38 GasMeterStandingData aseXML schema ..... 97~~86~~
Figure 4-39 MIRN Discovery Activity Diagram ..... 102~~91~~
Figure 4-40 MIRN Discovery Request Sequence Diagram ..... 102~~92~~
Figure 4-41 MIRN Discovery Response Sequence Diagram ..... 103~~93~~
Figure 4-42 NMIDiscoveryRequest aseXML schema ..... 105~~95~~
Figure 4-43 NMIDiscoveryResponse aseXML schema ..... 112~~100~~
Figure 4-44 GasStandingData type (high level) aseXML schema ..... 113~~101~~
Figure 4-45 GasMasterStandingData aseXML schema ..... 114~~102~~

Figure 4-46 GasMeterStandingData aseXML schema ..... 115~~103~~
Figure 4-47 ServicePoint aseXML schema ..... 115~~103~~
Figure 4-48 NMIDiscoveryResponse aseXML schema ..... 124~~110~~
Figure 4-49 GasMasterStandingData type (high level) aseXML schema ..... 124~~110~~
Figure 4-50 GasMeterStandingData aseXML schema ..... 125~~111~~
Figure 4-51 GasMasterStandingData aseXML schema ..... 126~~112~~
Figure 4-52 ServicePoint aseXML schema ..... 126~~112~~
Figure 4-53 NMI Standing Data Activity Diagram ..... 131~~117~~
Figure 4-54 NMI Standing Data Request Sequence Diagram ..... 131~~117~~
Figure 4-55 NMI Standing Data Response Sequence Diagram ..... 132~~118~~
Figure 4-56 NMIStandingDataRequest aseXML schema ..... 134~~120~~
Figure 4-57 NMIStandingDataResponse aseXML schema ..... 140~~123~~
Figure 4-58 Update Site Access Information Activity Diagram ..... 142~~125~~
Figure 4-59 Update Site Access Information Sequence Diagram ..... 143~~126~~
Figure 4-60 AmendMeterRouteDetails/AmendSiteAccessDetails aseXML schema ..... 145~~127~~
Figure 4-61 GasStandingDataUpdate type aseXML schema ..... 145~~128~~
Figure 4-62 Update Site Address Information Activity Diagram ..... 146~~129~~
Figure 4-63 Update Site Address Information Sequence Diagram ..... 147~~130~~
Figure 4-64 AmendMeterRouteDetails/CSVAmendSiteAddressDetails aseXML schema ..... 151~~134~~
Figure 4-65 Network DUoS Billing Activity Diagram ..... 152~~135~~
Figure 4-66 Network DUoS Billing Sequence Diagram ..... 154~~137~~
Figure 4-67 NetworkDUoSBillingNotification aseXML schema ..... 169~~151~~
Figure 4-63 Amend Customer Details Activity Diagram ..... 172~~154~~
Figure 4-64 Customer Details Change Sequence Diagram ..... 172~~154~~
Figure 4-65 CustomerDetailsNotification/CSVCustomer aseXML schema ..... 176~~157~~

1. Introduction

1.1. Purpose

This document forms part of the AEMO Specification Pack as referred to in the *Retail Market Procedures* . The purpose of this document is to define the behaviour of the business and IT systems as viewed from the outside. The definitions identify the manner in which the participants in either the South Australian or Western Australian Gas Markets will communicate with each other to manage their day-to-day business. The document will present the participant's systems as a "black box" highlighting only the necessary interfaces that are required for all participants to specify, build and test their systems.

1.2. Audience

The document has been written for business and IT personnel within the market participants as well as AEMO's business and IT personnel. It is expected that the audience will have a familiarity with the overall business endeavour of Gas FRC in South Australia and Western Australia, and with the artefacts listed in the Related Documents section of this document.

1.3. Related Documents

1.3.1. South Australia and Western Australia

This document should be read in conjunction with the other documents contained within the AEMO Specification Pack as follows:

- Interface Control Document,
- FRC B2M-B2B System Architecture
- FRC B2M-B2B System Specifications
- CSV Data Format Specification
- Service Order Specifications

Further detailed documents are provided for assistance and clarification in the Information Pack as follows:

- Business Specification
- Consolidated Transaction List
- B2M Process Flow and Sequence Diagrams
- B2B Process Flow Diagrams
- Glossary of Terms

1.3.2. Victoria

A number of documents were referred to in the original Victorian version of this document. For further information about Victorian processes and specifications of the following related documents or artefacts that have been issued as part of Participant Build Packs 1 and 2 and

should be read in conjunction with this document. The table below defines the documents and the versions referred to in the original Victorian version of this document.

Ref	Artefact Name	Version	Responsible Party or Authors
1	Retail Gas Market Rules: now the Retail Market Procedures (Victoria)	As published on the AEMO website	*Gas Retail Consultative Forum (GRCF)*
2	Participant Build Pack 1 - Process Maps	As published on the AEMO website	*Retail Business Process Working Group (RBPWG)*
3	Participant Build Pack 1 - Transaction Definition Table	As published on the AEMO website	*Retail Business Process Working Group (RBPWG)*
4	Participant Build Pack 1 - Data Element Definition	As published on the AEMO website	*Retail Business Process Working Group (RBPWG)*
5	Guidelines for Development of a Standard for Energy Transactions in XML (aseXML)	As published on the AEMO website	*ASWG*
6	User Guide to MIBB Reports	As published on the AEMO website	*AEMO*
7	Participant Build Pack 2 - Glossary	As published on the AEMO website	*AEMO*
8	Participant Build Pack 2- Usage Guidelines	As published on the AEMO website	*AEMO*
9	Participant Build Pack 2 - System Interface Definitions	As published on the AEMO website	*AEMO*
10	Participant Build Pack 3 – FRC B2B System Architecture	As published on the AEMO website	*AEMO*

1.4. Definitions and Acronyms

All terms related to this document are defined in the Glossary which forms part of the Information Pack.

Please note that acronyms MIRN (Meter Installation Registration Number) and NMI (National Meter Identifier) are used in this document interchangeably.

1.5. Overview and Structure

This document is organised in a number of sections as described below:

Section	Description
Overview of Interfaces	This section describes the relationship between the various interfaces.
Specific Interfaces	This section describes the parts of the interface that are specific or only apply to a given interface.
Appendices	A number of appendices provided in this document to facilitate transaction search via cross-references and supply event codes, data elements details and definitions of csv files that will not be carried via aseXML.. A. Data Dictionary for aseXML transaction elements and CSV file column designators B. aseXML Standard Event Codes C. Gas FRC Application Event Codes D. Table of Transactions cross references E. Non Automated Electronic Files

1.6. Examples of aseXML code

Examples of aseXML code have been provided in this document. These examples are based on those provided by the ASWG and have been updated to be aligned with Release 13 of aseXML which is the version to be used in the SA and WA markets.

These examples are provided for illustration only. aseXML code developed by market participants should always be based on the schema published by the ASWG (at http://www.aemo.com.au/aseXML/index.htm) and not the examples provided in this document.

2. Overview of Interfaces

2.1. Overview

This document focuses on the specific aseXML interfaces to be used in the B2B transactions. The interfaces focus on business and application logic. The interfaces are grouped based on the transaction categorisation in the Consolidated Transaction List.

Every group of specific interfaces has one or more activity diagrams associated with it. These activity diagrams are based on the B2B Process Flow diagrams.

Each sequence diagram has a table associated with it. Each row in this table describes correlation between the process flow and the corresponding aseXML transaction.

2.2. Scope

This document describes in detail those transactions from the Consolidated Transaction List that will be delivered with aseXML messages. In addition, in Appendix E, this document provides details of some non-automated electronic files (csv files not carried via aseXML). This document excludes references to any B2M transactions or processes where data is also sent to AEMO.

The transactions from the Consolidated Transaction List that have interfaces defined in this document are listed in the following table.

Group	Consolidated Transaction List Reference
Meter Reads - Energy and Consumption	3, 3A, 6, 9, 9A, 12, 13, 15, 17, 17A, 41, 41A,46, 49, 50, 50A, 51, 51A, 53, 53A, 231, 242, 243, 246, 246A Note: Transactions 31, 31A and 31B listed in the Victorian version of this document will not be used in SA or WA.
Service Orders	87, 87A, 92, 93, 101, 101A, 104, 108, 125, 136, 151, 151A, 154, 157, 310, 312, 314, 316, 318, 320, 310A, 311, 312A, 313, 314A, 315, 316A, 317, 318A, 319, 320A, 321, 330
MIRN Discovery	280, 281, 284
Route and Site Information	66, 67, 68, 69, 75
Network Billing	331,332, 350, 351, 352, 353
Customer Details (SA Only)	70

3. Generic Interfaces

Detailed protocols and mechanisms for handling messages and transactions are described in detail in FRC B2M System Architecture document which is included in the AEMO Specification Pack.

4. Specific Interfaces

CDATA and Hexadecimal Characters

Note, that the use of CDATA (non-parsed character data), characters **<**, **>**, **&** , and hexadecimal characters is prohibited in all transactions. Entity escape characters must be used to handle any special characters.

Time Formats

All date/time and time elements in the body of aseXML B2B transactions will be expressed with a Time Zone Designator (TZD). The time zone selected will be at the discretion of the sending party. The sending party must therefore ensure that the combination of time and time zone accurately communicates the point in time being defined.

For example, if a customer in South Australia requests an appointment at 9:00am (Central Australia Standard Time), the data element could contain 09:00:00+09:30 or 09:30+10:00. It is then up to the receiving party to ensure that they have the ability to convert this time to another time zone if required.

In the case of the CSV data element Last_Modified_Date_Time (as above), the time zone selected is at the discretion of the sending party.

In the case of the CSV element 'Planned_Outage_Time', as this is only included in a manually-prepared email, it will always be in local time without a Time Zone Designator.

As defined in the B2B-B2M Hub Specifications and Architecture documents all date/time stamps in the messaging layer (ebXML) and in the headers of aseXML transactions will be expressed in GMT+10 (market time).

In the following transaction specifications, where a data element is optional and data is not going to be provided for a specific use of the transaction, then that data element should not be included in the transaction. Specifically, the inclusion of the data element with no data or with a '0' should not be used as a way of indicating that there is no data to be communicated.

4.1. Meter Reads – Energy and Consumption

4.1.1. Overview

Meter Reads – Energy and Consumption are the transactions between Network Operators and Users that provide and manage the usage data for bill calculation. The following table shows the Meter Reads – Energy and Consumption group of aseXML transactions and the corresponding transactions from the Table of Transactions.

aseXML Transaction	Transaction Table	
Transaction Name	Ref No	Transaction Type
MeterDataNotification	9	Energy Flow for Special Read (Not customer transfer)
	13	Energy Flow for Special Read (Customer transfer)
	17	Energy Flow for Disconnection Read
	41	Energy Flow for Scheduled or Special Read
	50	Energy Flow for Missing Reads
	51	Energy Flow for Estimated Read
	53	Energy Flow for Substituted Read
	246	Energy Flow Adjustment for RB
MeterDataResponse	9A	Energy Flow for Special Read (Not customer transfer) Response
	13A	Energy Flow for Special Read (Customer transfer) Response
	17A	Energy Flow for Disconnection Read Response
	41A	Energy Flow for Scheduled or Special Read Response
	50A	Energy Flow for Missing Reads Response
	51A	Energy Flow for Estimated Read Response
	53A	Energy Flow for Substituted Read Response
	246A	Energy Flow Adjustment for RB Response
MeterDataMissingNotification	49	User requesting missing meter reading data
MeterReadInputNotification	15	Disconnection Read
SpecialReadRequest	3	Special Read Request
SpecialReadResponse	3A	Special Read Request Response
	6	Special Read Request No Access Advice
MeterDataVerifyRequest	242	Meter Data Verification Request
MeterDataVerifyResponse	243	Meter Data Verification Response
AccountCreationNotification	12	Account Creation Transaction
	231	Account Creation Transaction

Note: Transactions 31, 31A and 31B listed in the Victorian version of this document, will not be used in SA or WA.

With the exception of AccountCreationNotification and MeterDataMissingNotification (which is used for interval meter data in WA only), none of the above transactions is used in relation to meter data for interval meters.

These transactions belong to the Meter Data Management (MDMT) Transaction Group in aseXML.

The transactions have been grouped into the following for definition:

- Provision of Energy Flow Data
- Missing Energy Data

- Meter Read Input
- Gas History
- Special Reads
- Meter Data Verification
- Account Creation

These are defined below.

4.1.2. Provision of Energy Flow Data

Energy Flow data is transferred from a Network Operator to a User as part of a scheduled process following data collection and energy calculation. The activity diagram below shows the high level process:

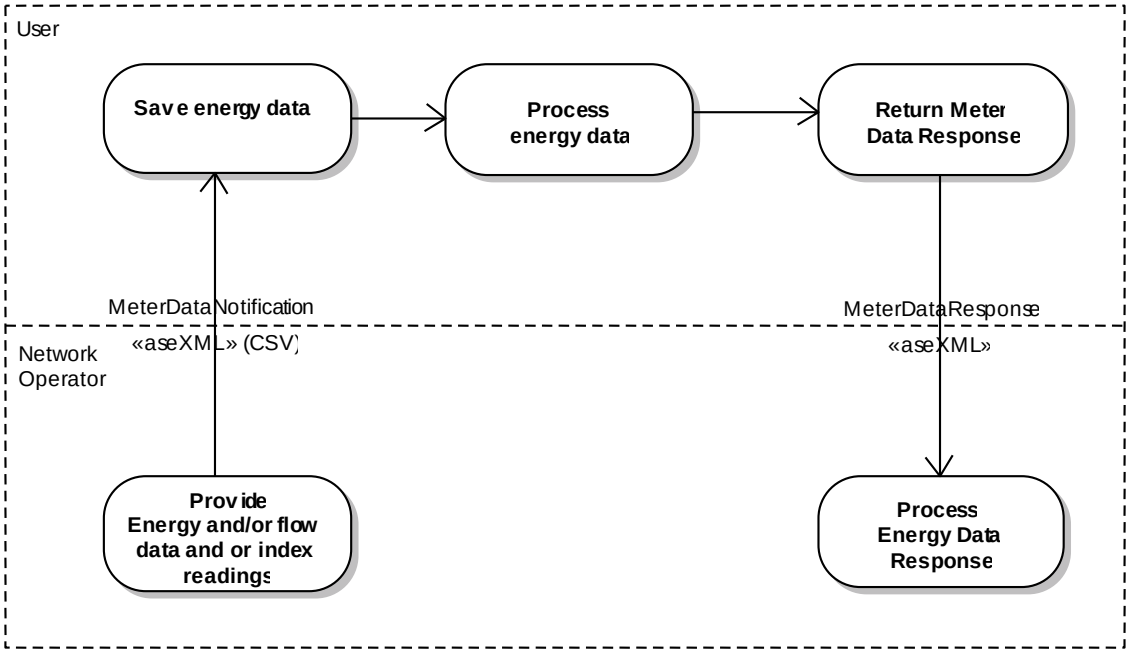

Figure 4-1 Provision of Energy Flow Data Activity Diagram

Process Sequence

Following collection of Meter Read Data and subsequent calculation of energy data, a Network Operator will combine the data for each User for the agreed period into comma separated value (CSV) format and forward this to the applicable Users as MeterDataNotification transactions. The data will be forwarded within the timeframe prescribed in the *Retail Market Procedures* or as otherwise agreed.

The diagram below shows the sequence of events for this transaction:

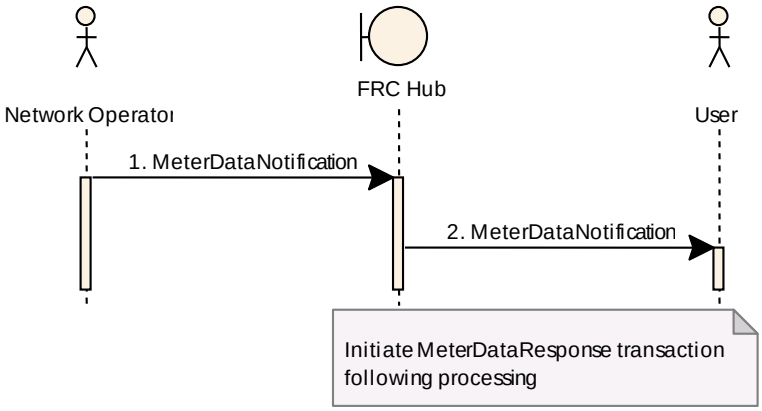

Figure 4-2 Meter Data Notification Sequence Diagram

ID	aseXML Transaction	From Object	To Object	Process Flow
1	MeterDataNotification	Network Operator	FRC Hub	MR13
2	MeterDataNotification	FRC Hub	User	

After a User has processed the CSV data, a MeterDataResponse message is returned to the Network Operator to provide advice that the data has been processed. The MeterDataResponse transaction will identify whether the processing was:

- Successful – all CSV records were successfully processed
- Partially successful – processing of some CSV records failed
- Failure – no processing of the CSV data was possible.

by containing event records for all errors detected. This may be only one event record if the entire processing was a failure, or many – one for each CSV record that failed – if the processing was partially successful. The Network Operator can use the error information to correct the data for resubmission to the applicable User. CSV records which fail to be read must be resent to the appropriate user.

The diagram below shows the sequence of events for this transaction:

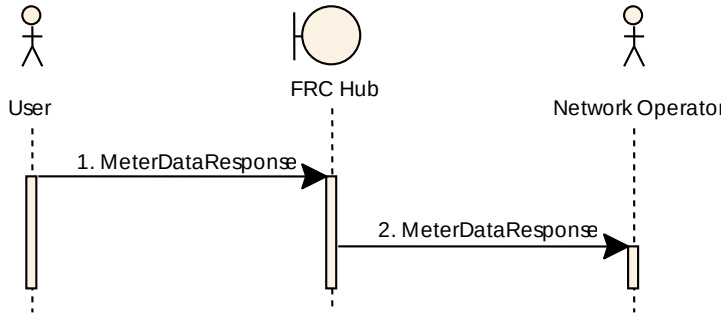

Figure 4-3 Meter Data Response Sequence Diagram

ID	aseXML Transaction	From Object	To Object	Process Flow
1	MeterDataResponse	User	FRC Hub	MR13
2	MeterDataResponse	FRC Hub	Network Operator	

4.1.2.1. MeterDataNotification

Transaction Definition Table cross-reference	This interface realises the following transactions from the Transaction Definition Table: • 9 - Energy Flow for Special Read (Not customer transfer), • 13 - Energy Flow for Special Read (Customer transfer), • 17 - Energy Flow for Disconnection Read, • Note: the Victorian transaction 31A - Energy Flow for Customer Own Read is not used in SA or WA) • 41 - Energy Flow for Scheduled or Special Read, • 50 - Energy Flow for Missing Reads, • 51 - Energy Flow for Estimated Read, • 53 - Energy Flow for Substituted Read, • 246 - Energy Flow Adjustment for RB
Trigger	This interface can be triggered as a result of any Scheduled or Special Meter Read.
Pre-conditions	Calculation of energy flow data for relevant User for the agreed period
Post-conditions	User application has saved the CSV data.
Transaction acknowledgment specific event codes	3610, 3627, 3648, 3649 - 3655, 3657, 3658, 3676, 3679, 3665, 3666, 3670, 3672, 3674 (Also the generic event codes 3603, 3659, 3662, 3673 can be used)

The MeterDataNotification transaction transfers the Meter Read data in CSV format from the Network Operator to the User.

Transaction Data Elements

Transaction:	MeterDataNotification
Received From:	Network Operator
Sent To:	User

Data Element	Victoria & SA/WA Mandatory / Optional / Not Required	Usage
RECORDCOUNT	M	SPECIFIES THE NUMBER OF RECORDS CONTAINED IN THE POPULATED CSV ELEMENT EXCLUDING THE HEADER ROW.
CSVCONSUMPTIONDATA	M	CONTAINS THE DATA IN CSV FORMAT. IF RECORDCOUNT IS SET TO 0, THEN THE VALUE OF CSVDATA ELEMENT MUST BE SET TO **XSI:NIL="TRUE"**.

CSV Elements

CSVConsumptionData		
Heading	**Victoria & SA/WA Mandatory /Optional**	**Comment**
NMI	M	
NMI_Checksum	M	
RB_Reference_Number	O	This element will not be provided if the Read is initiated by a Network Operator. The element is always Required if the User initiated the service order and provided the RB_Reference Number. For an implied Service Order (including a move-in or an unblock on transfer) the RB reference number will always equal the transfer request ID allocated by AEMO.
Reason_for_Read	M	
Gas_Meter_Number	M	
Gas_Meter_Units	M	

CSVConsumptionData		
Heading	**Victoria & SA/WA Mandatory /Optional**	**Comment**
Previous_Index_Value	O	Required unless this is the first read for a meter. If not provided the Consumed_Energy will be zero.
Previous_Read_Date	O	Required unless this is the first read for a meter. If not provided the Consumed_Energy will be zero.
Current_Index_Value	M	
Current_Read_Date	M	
Volume_Flow	M	Volume Flow is measured in cubic meters
Average_Heating_Value	M	
Pressure_Correction_Factor	M	
Consumed_Energy	M	Consumed Energy is measured in Megajoules
Type_of_Read	M	
ESTIMATION_SUBSTITUTION_TYPE	O	Required if Type of Read = “E” or “S”
ESTIMATION_SUBSTITUTION_REASON_CODE	O	Required if Type of Read = “E” or “S”
Meter_Status	M	If “Plugged” this is a Disconnection Read. Will always be “Turned On” in WA as meter status has no meaning in WA.
Next_Scheduled_Read_Date	M	
Hi_Low_Failure	M	
Meter_Capacity_Failure	M	
ADJUSTMENT_REASON_CODE	M	IF NOT = "NC" INDICATES METER DATA ADJUSTMENT

CSVConsumptionData		
Heading	**Victoria & SA/WA Mandatory /Optional**	**Comment**
ENERGY_CALCULATION_DATE_STAMP	NR	THIS ELEMENT IS DEFINED FOR USE IN THE CORRESPONDING B2M TRANSACTIONS. IT IS NOT REQUIRED FOR THE TRANSACTIONS IN THIS DOCUMENT.
ENERGY_CALCULATION_TIME_STAMP	NR	THIS ELEMENT IS DEFINED FOR USE IN THE CORRESPONDING B2M TRANSACTIONS. IT IS NOT REQUIRED FOR THE TRANSACTIONS IN THIS DOCUMENT.

The transaction is implemented as the MeterDataNotification transaction in aseXML. The transaction is in the following format:

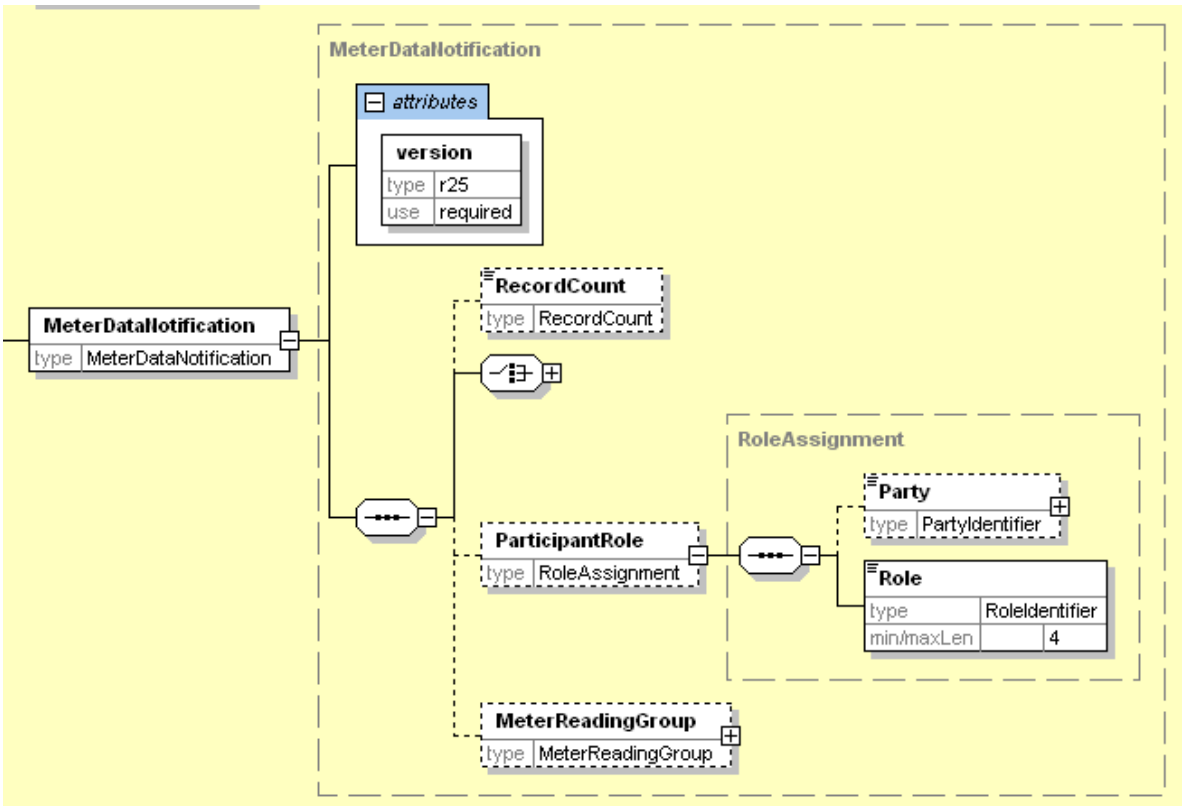

Figure 4-4 MeterDataNotification aseXML schema

The CSV data is included in the CSVConsumptionData element.

XML Sample


```
<Header>
        <From description="">FBSTEST</From>
        <To description="">DEV</To>
        <MessageID>20120302160238135</MessageID>
        <MessageDate>2012-03-02T15:02:30+10:00</MessageDate>
        <TransactionGroup>MDMT</TransactionGroup>
        <Priority>Low </Priority>
        <Market>SAGAS</Market>
        </Header>
        <Transactions>
          <Transaction transactionID="FBSTEST-20120302160230604" transactionDate="2012-03-
02T15:02:30+10:00">
                    <MeterDataNotification version="r25">
                              <RecordCount>1</RecordCount>

        <CSVConsumptionData>NMI,NMI_Checksum,RB_Reference_Number,Reason_for_Read,Gas_Meter_N
umber,Gas_Meter_Units,Previous_Index_Value,Previous_Read_Date,Current_Index_Value,Current_Read_D
ate,Volume_Flow ,Average_Heating_Value,Pressure_Correction_Factor,Consumed_Energy,Type_of_Read,Es
timation_Substitution_Type,Estimation_Substitution_Reason_Code,Meter_Status,Next_Scheduled_Read_Dat
e,Hi_Low _Failure,Meter_Capacity_Failure,Adjustment_Reason_Code,Energy_Calculation_Date_Stamp,Energ
y_Calculation_Time_Stamp
5767656543,7,,SRF,A1234,M,12345,2011-04-12,12987,2011-06-11,642,33,1.1,45678,A,,,Plugged,2011-08-
10,N,N,NC,,</CSVConsumptionData>
                    </MeterDataNotification>
          </Transaction>
        </Transactions>
```


4.1.2.2. MeterDataResponse

Transaction Definition Table cross-reference	This interface realises the following transactions from the Transaction Definition Table: • 9A - Energy Flow for Special Read (Not customer transfer) Response, • 13A - Energy Flow for Special Read (Customer transfer) Response, • 17A - Energy Flow for Disconnection Read Response, • 41A - Energy Flow for Scheduled or Special Read Response, • 50A - Energy Flow for Missing Reads Response • 51A - Energy Flow for Estimated Read Response, • 53A - Energy Flow for Substituted Read Response, • 246A Energy Flow Adjustment for RB Response
Trigger	Completion of processing of the CSV data from the MeterDataNotification transaction
Pre-conditions	Energy data has been delivered via MeterDataNotification transaction and processed
Post-conditions	Network Operator has a record of success or failure of processing of the energy data, and all errors detected.

Transaction acknowledgment specific event codes	None. (the generic event codes 3603, 3659, 3662, 3673 can be used)

Note: Transaction 31B listed in the Victorian version of this document will not be used in SA or WA.

The MeterDataResponse transaction advises the Network Operator of the success or failure of the processing of the CSV data file. It also identifies any errors detected and records not processed within the CSV data.

Transaction Data Elements

Transaction:	MeterDataResponse
Received From:	User
Sent To:	Network Operator

Data Element	Victoria and SA/WA Mandatory / Optional / Not Required	Usage
ACTIVITYID	M	IDENTIFIER OF THE PROCESSING ACTIVITY THAT GENERATED THIS TRANSACTION
ACCEPTEDCOUNT	M	COUNT OF THE RECORDS THAT WERE PROCESSED SUCCESSFULLY
LOADDATE	M	DATE THE PROCESSING TOOK PLACE
EVENT	O	May be repeated any number of times. If processing was partially successful there will be one event for each record that failed.

The transaction is implemented as the MeterDataResponse transaction in aseXML. The transaction is in the following format:

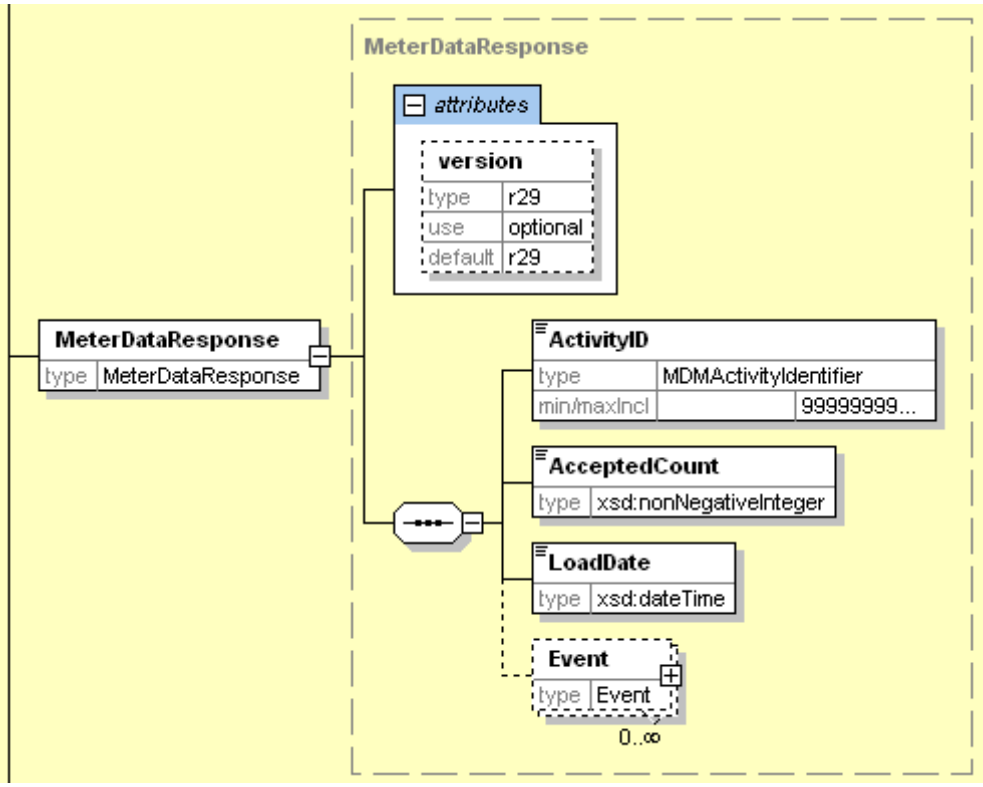

Figure 4-5 MeterDataResponse as eXML schema

XML Sample


```
<Header>
        <From description="">FBSTEST</From>
        <To description="">DEV</To>
        <MessageID>20120302161344265</MessageID>
        <MessageDate>2012-03-02T15:12:20+10:00</MessageDate>
        <TransactionGroup>MDMT</TransactionGroup>
        <Priority>Medium</Priority>
        <Market>SAGAS</Market>
</Header>
<Transactions>
        <Transaction transactionID="FBSTEST-20120302161220514" transactionDate="2012-03-
02T15:12:20+10:00" initiatingTransactionID="FBS-20120302161220514">
            <MeterDataResponse version="r29">
                <ActivityID>0001</ActivityID>
                <AcceptedCount>3</AcceptedCount>
                <LoadDate>2012-03-02T15:12:20+10:00</LoadDate>
                <Event class="Message" severity="Information">
                    <Code>0</Code>
                        <KeyInfo>This is the KeyInfo field; Use it for any freetext info, but the limit is 80
          cha</KeyInfo>
                    <Context>Context</Context>
                    <Explanation>All OK</Explanation>
                </Event>
            </MeterDataResponse>
        </Transaction>
</Transactions>
```


4.1.3. Missing Energy Data

The Missing Energy Data transaction is used by a User to request any energy data that has not been received from a Network Operator by the expected date. The Network Operator will obtain the requested data and provide it to the User via the Meter Data Notification transaction. This may be either a special transaction in response to this request or the next scheduled transaction.

The activity diagram below shows a high level view of this process:

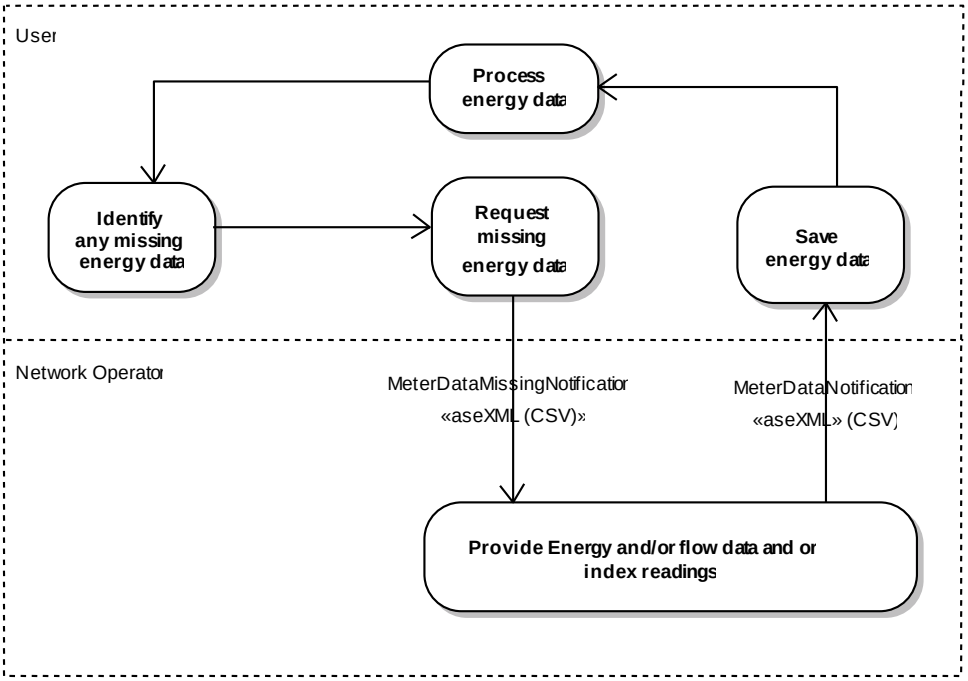

Figure 4-6 Missing Meter Data Activity Diagram

Process Sequence

A User will identify any MIRNs for which energy data is overdue from a Network Operator and submit a MeterDataMissingNotification transaction to the responsible Network Operator. The transaction will contain the list of MIRNs and the last read date for which the User has energy data. The data is supplied in CSV format.

The diagram below shows the sequence of events for this transaction:

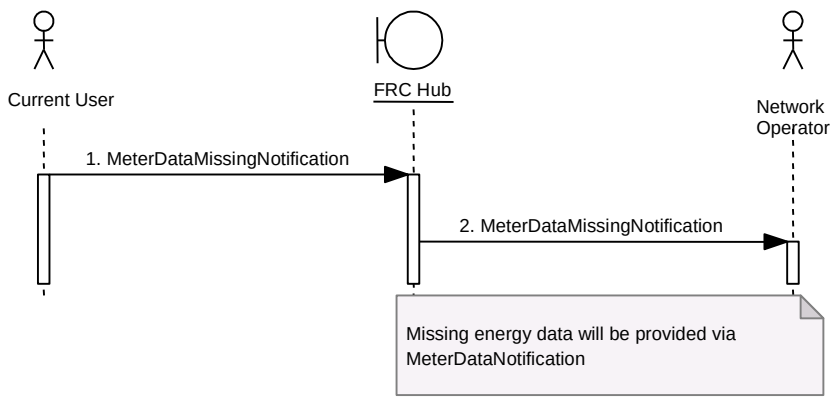

Figure 4-7 Missing Meter Data Sequence Diagram

ID	AseXML Transaction	From Object	To Object	Process Flow
1	MeterDataMissingNotification	Current User	FRC Hub	REQ2
2	MeterDataMissingNotification	FRC Hub	Network Operator	

For a basic meter, the Network Operator will provide the required data via a MeterDataNotification transaction. This may be either a special transaction in response to this request or the next scheduled transaction.. For an interval meter the Network Operator will provide the required data via an INTERVALMETERDATA CSV file. This may be either a special file in response to this request or part of the next scheduled INTERVALMETERDATA CSV file. The data can be downloaded from a secure web site operated by the Network Operator.

Note: There is no defined method for a Network Operator to notify a User of errors in the Missing Data Request transaction (eg. Network Operator is not responsible for requested MIRN). It is a User's responsibility to escalate the request via a manual process if a Meter Data Notification transaction is not satisfying the request.

4.1.3.1. MeterDataMissingNotification

Transaction Definition Table cross-reference	This interface realises the following transactions from the Transaction Definition Table: • 49 – User requesting missing meter reading data
Trigger	This interface is triggered when a User determines that expected energy data for a MIRN is overdue.
Pre-conditions	None
Post-conditions	Network Operator has a list of MIRNs for which energy data is required.
Transaction acknowledgment specific event codes	3665, 3666, 3670, 3672, 3674 (Also the generic event codes 3603, 3659, 3662, 3673 can be used)

The MeterDataMissingNotification transaction is used by a User to request overdue energy data from a Network Operator. In SA this transaction is used only for basic meters. In WA, the transaction is used for both basic and interval meters.

Transaction Data Elements

Transaction:	MeterDataMissingNotification
Received From:	User
Sent To:	Network Operator

Data Element	Victoria and SA/WA Mandatory / Optional / Not Required	Usage
RECORDCOUNT	M	SPECIFIES THE NUMBER OF RECORDS CONTAINED IN THE POPULATED CSV ELEMENT, EXCLUDING THE RECORD WITH COLUMN DESIGNATORS
CSVMISSINGMETERDATA/ CSVDATA	M	CONTAINS EMBEDDED DATA IN CSV FORMAT. IF RECORDCOUNT IS SET TO 0, THEN THE VALUE OF CSVDATA ELEMENT MUST BE SET TO **XSI:NIL="TRUE".**

CSV Elements

CSVMissingMeterData/CSVData		
Heading	**Victoria and SA/WA Mandatory / Optional / Not Required**	**Comment**
NMI	M	
NMI_Checksum	M	
Last_Read_Date	M	The last read on which the meter reads have been supplied to the User prior to the missing consumed energy data.

The transaction is implemented as the MeterDataMissingNotification transaction in aseXML.

The transaction is in the following format:

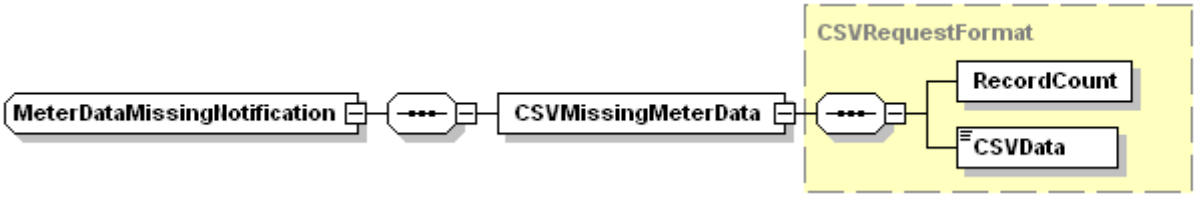

Figure 4-8 MeterDataMissingNotification as eXML schema

XML Sample

```
<Header>
    <From description="Retailer">XXXXXXXXXX</From>
    <To description="Network Operator">XXXXXXXXXX</To>
    <MessageID>RETO-MSG-73645</MessageID>
    <MessageDate>2004-08-01T12:00:00+10:00</MessageDate>
    <TransactionGroup>MDMT</TransactionGroup>
    <Market>SAGAS</Market>
</Header>
<Transactions>
    <Transaction transactionID="RETO-TXN-46735" transactionDate="2004-08-01T12:00:00+10:00">
        <MeterDataMissingNotification version="r9">
            <CSVMissingMeterData>
                <RecordCount>3</RecordCount>
                <CSVData>
                NMI,NMI_Checksum,Last_Read_Date
                1876546765,3,2004-08-01
                8798767645,5,2004-08-02
                3874958676,6,2004-08-01
                </CSVData>
            </CSVMissingMeterData>
        </MeterDataMissingNotification>
    </Transaction>
</Transactions>
```

4.1.4. Meter Read Input (SA Only)

The Meter Read Input transaction is used by the User to supply a Gas Meter Index reading to a Network Operator. The Network Operator then uses the index data to calculate the consumed energy for the customer. In SA this may occur if a User disconnects a customer for non-payment and uses the Meter Read Input transaction to notify the Network Operator of the Gas Meter Index reading.

The activity diagram below shows a high level view of this process:

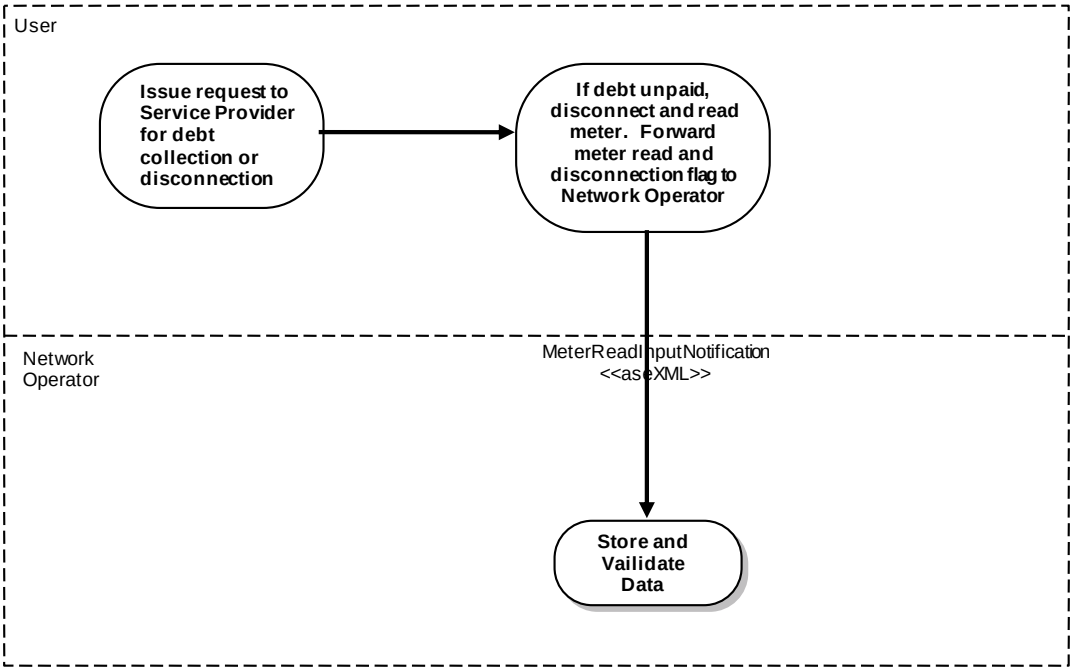

Figure 4-9 Meter Read Input Activity Diagram

Process Sequence

A User will obtain the Meter Index Data on disconnection of a meter. The User uses a MeterReadInputNotification transaction to send the index data to the Network Operator for storage and later use for energy flow calculations.

The diagram below shows the sequence of events for this transaction:

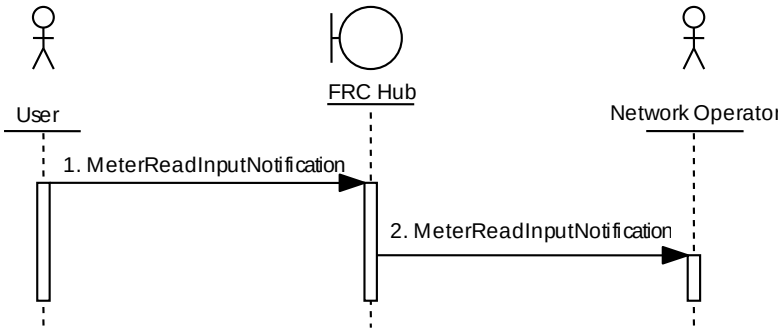

Figure 4-10 Meter Read Input Sequence Diagram (SA only)

ID	AseXML Transaction	From Object	To Object	Process Flow
1	MeterReadInputNotification	User	FRC Hub	MR9B
2	MeterReadInputNotification	FRC Hub	Network Operator	

4.1.4.1. MeterReadInputNotification (SA only)

Transaction Definition Table cross-reference	This interface realises the following transactions from the Transaction Definition Table: • 15 – Disconnection Read
Trigger	This interface is triggered when a User obtains an index reading from a gas meter.
Pre-conditions	Meter index data is obtained by the User
Post-conditions	Meter index data saved by Network Operator
Transaction acknowledgment specific event codes	None. (The generic event codes 3603, 3659, 3662, 3673 can be used)

The MeterReadInputNotification transaction transfers meter index and read data from the User to the Network Operator.

Transaction Data Elements

Transaction:	MeterReadInputNotification
Received From:	User
Sent To:	Network Operator

Data Element	Victoria and SA Mandatory / Optional / Not Required	Usage
NMI	M	
CHECKSUM	M	IMPLEMENTED AS AN ATTRIBUTE OF THE NMI ASEXML ELEMENT
METERSERIALNUMBER	M	
METERSTATUS	M	IDENTIFIES WHETHER SUPPLY HAS BEEN DISCONNECTED (PLUGGED) OR NOT.
CURRENT/INDEXVALUE	M	
CURRENT/READDATE	M	
CURRENT/TYPEOFREAD	M	

The transaction is implemented as the MeterReadInputNotification transaction in aseXML utilising the xsi:type="ase:GasStandingData" construct for the ReadInputData element.

The transaction is in the following format:

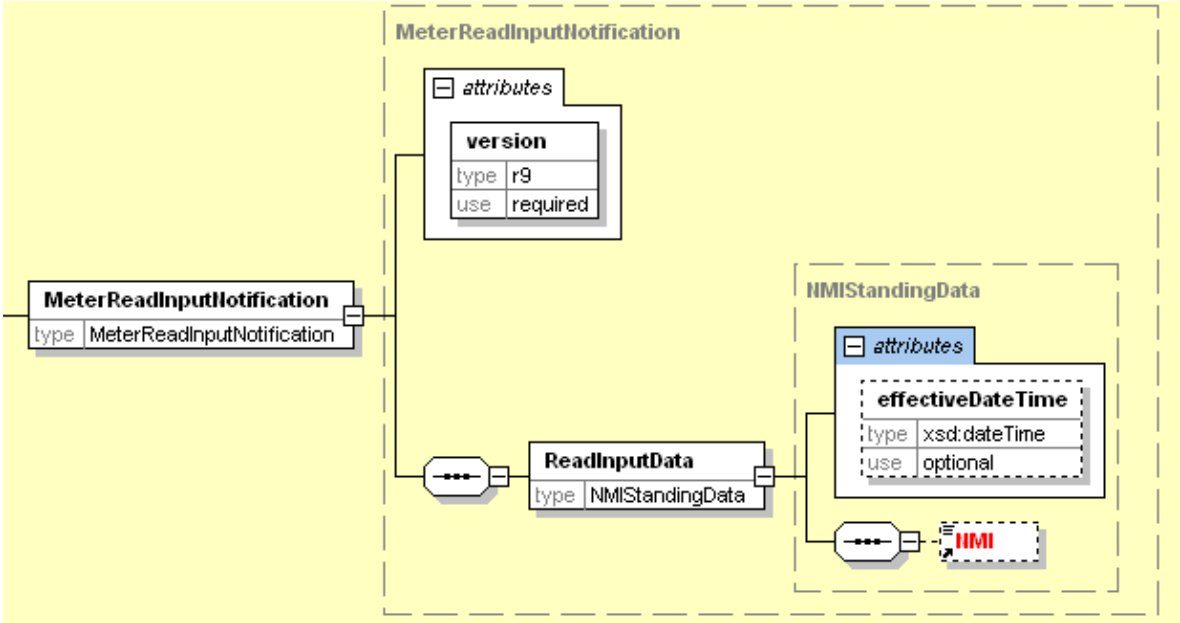

Figure 4-11 MeterReadInputNotification as eXML schema

See section 4.3.2.3 for the format of the GasStandingData type construct.

XML Sample


```
<Header>
        <From description="">FBSTEST</From>
        <To description="">DEV</To>
        <MessageID>20120302173152110</MessageID>
        <MessageDate>2012-03-02T16:31:44+10:00</MessageDate>
        <TransactionGroup>MDMT</TransactionGroup>
        <Priority>Medium</Priority>
        <Market>SAGAS</Market>
</Header>
<Transactions>
        <Transaction transactionID="FBSTEST-20120302173144172" transactionDate="2012-03-
02T16:31:44+10:00">
                <MeterReadInputNotification version="r9">
                        <ReadInputData xsi:type="ase:GasStandingData" version="r29">
                            <NMI checksum="1">5510419959</NMI>
                            <MeterData>
                                <MeterSerialNumber>M1234</MeterSerialNumber>
                                <MeterStatus>Turned on</MeterStatus>
                                <MeterRead>
                                        <Current>
                                            <IndexValue>2345</IndexValue>
                                            <ReadDate>2012-03-02</ReadDate>
                                            <TypeOfRead>Customer Own Read</TypeOfRead>
                                        </Current>
                                </MeterRead>
                            </MeterData>
                        </ReadInputData>
                </MeterReadInputNotification>
            </Transaction>
</Transactions>
```

4.1.5. Special Reads

The Special Read transactions manage a requirement by a User to obtain a meter read from a Network Operator outside of the scheduled read for a specific meter.

The activity diagram below is a high level view of this process:

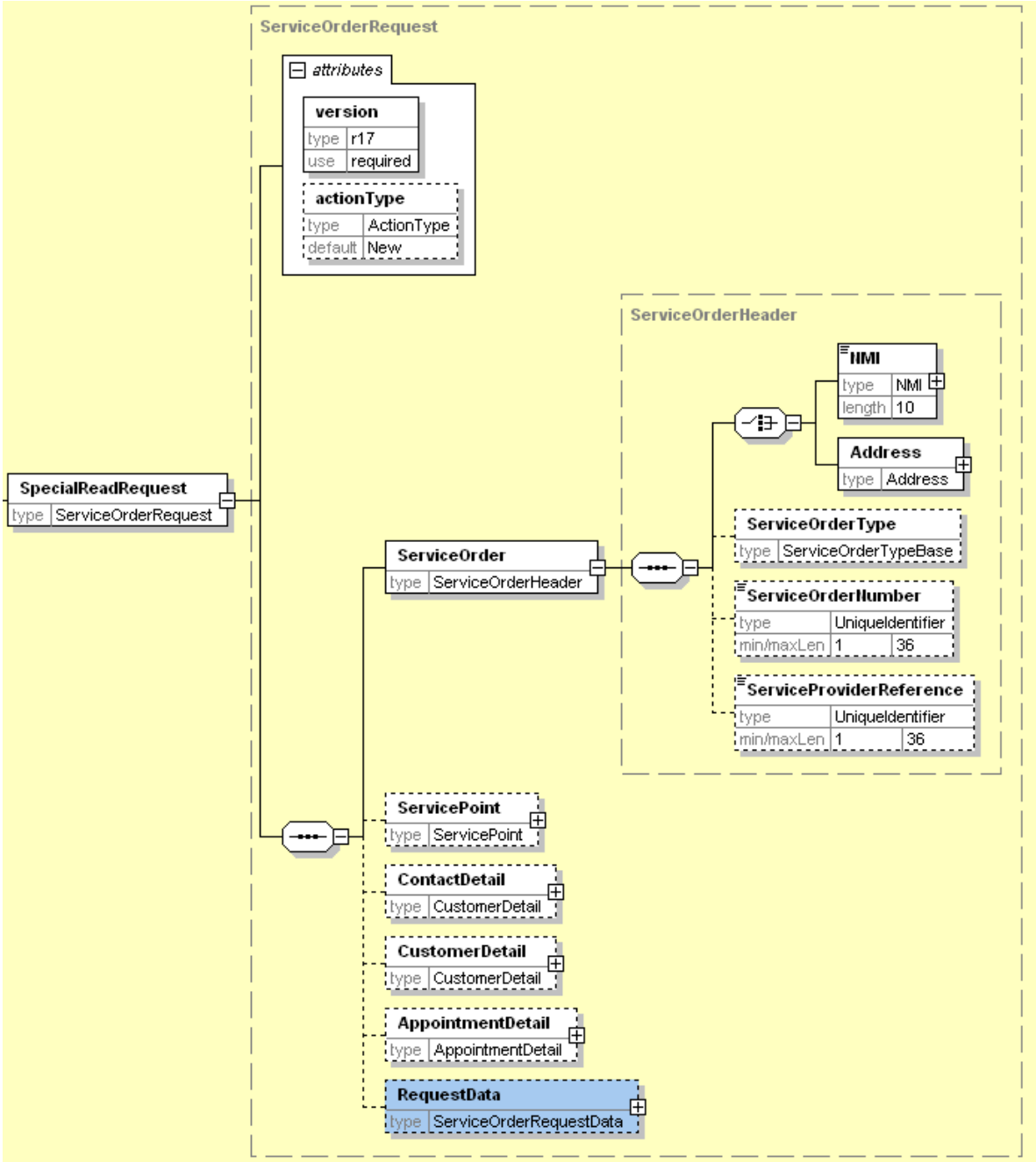

Figure 4-12 Special Reads Activity Diagram

Cancellation Process

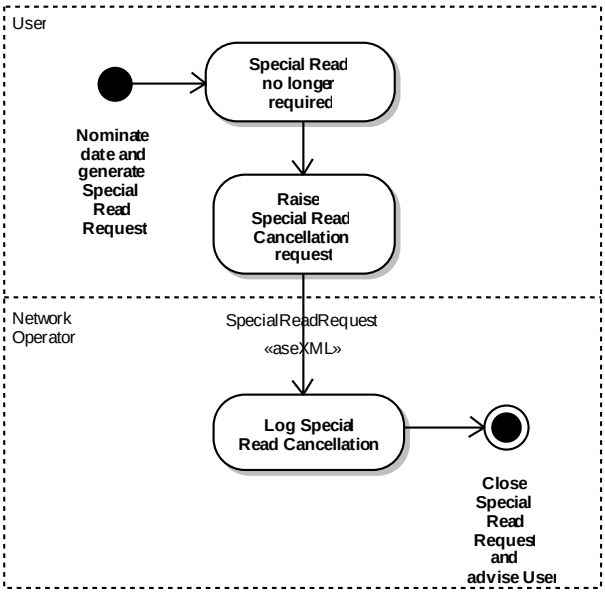

Figure 4-13 Special Read Cancellation Activity Diagram

Process Sequence

When a User has a requirement for a Special Meter Read a SpecialReadRequest is generated and forwarded to the Network Operator. The request will contain an actionType set to "New" to identify that this is a new request.

Once the Network Operator has logged the Special Read Request and generated a Work Request Number a SpecialReadResponse containing the Work Request Number is forwarded to the User to provide a reference for the User.

The diagram below shows the sequence of events for this transaction:

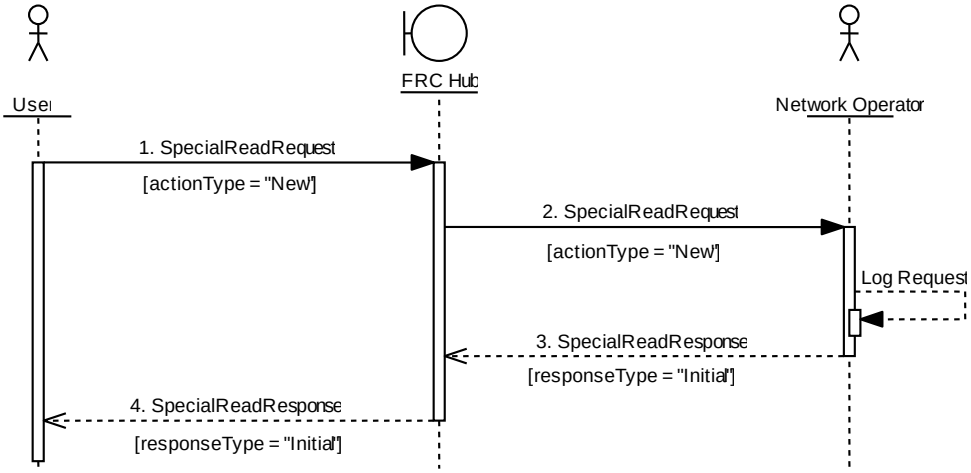

Figure 4-14 Special Read Initiation Sequence Diagram

ID	aseXML Transaction	From Object	To Object	Process Flow
1	SpecialReadRequest	User	FRC Hub	MR4A
2	SpecialReadRequest	FRC Hub	Network Operator	
3	SpecialReadResponse	Network Operator	FRC Hub	MR4A
4	SpecialReadResponse	FRC Hub	User	

If the User identifies that the Special Read is no longer required, the User will forward a SpecialReadRequest transaction to the Network Operator with the actionType set to "Cancel" to identify that this is a cancellation.

The diagram below shows the sequence of events for this transaction:

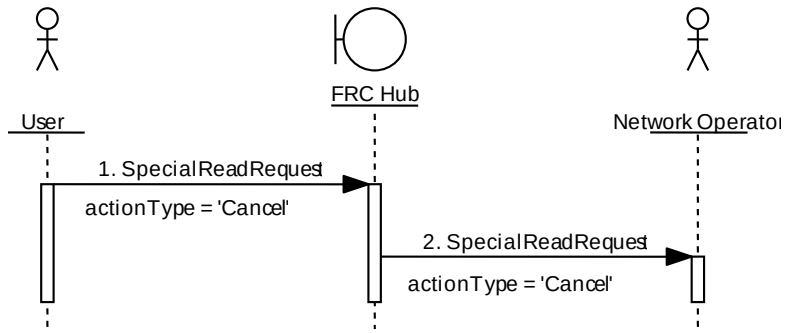

Figure 4-15 Special Read Cancellation Sequence Diagram

ID	aseXML Transaction	From Object	To Object	Process Flow
1	SpecialReadRequest	User	FRC Hub	MR4A
2	SpecialReadRequest	FRC Hub	NONetwork Operator	

The User cannot modify a Special Read once accepted by the Network Operator. If a User identifies a change to the Special Read requirements (ie. a new date) the User will cancel the original Special Read and create a new one.

If, in the attempt to carry out the special read, a Network Operator is unable to gain access to the meter, a SpecialReadResponse is forwarded to the User detailing the inability to gain access and the reason why. In this instance, the Special Read Request is deemed to be satisfied, and the User must make another Special Read Request if the read is still required. If a user, other than the current user, requests a special meter read, then the Network Operator must not provide the user with the metering data. The Network Operator must inform the requesting user that no meter reading data was obtained because the network operator was unable to undertake a special meter read.

In the case of a move-in, if (due to inability to obtain access) the Network Operator uses a meter reading that was not requested by the incoming user as the basis for a special read (eg a special read requested by the current user, or a scheduled meter reading), then the notification to the incoming user of the failure to obtain the meter reading, will be via e-mail.

If the Network Operator has received a cancellation notice from the User, the Network Operator will cancel the Special Read and forward a SpecialReadResponse to the User to confirm closure.

In both of the above instances the response will contain a responseType set to "Closure" to identify that the Special Read is closed.

The diagram below shows the sequence of events for this transaction:

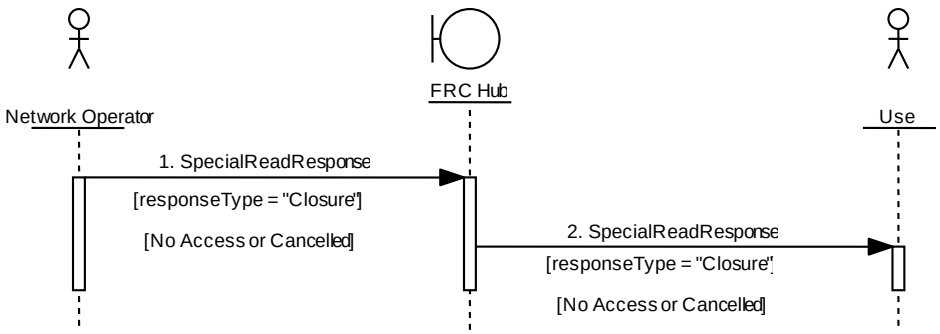

Figure 4-16 Special Read Closure (No Access) Sequence Diagram

ID	aseXML Transaction	From Object	To Object	Process Flow
1	SpecialReadResponse	Network Operator	FRC Hub	MR4A
2	SpecialReadResponse	FRC Hub	User	

If the Special Read is concluded successfully the energy data is forwarded to the User via a scheduled MeterDataNotification transaction.

4.1.5.1. SpecialReadRequest

Transaction Definition Table cross-reference	This interface realises the following transactions from the Transaction Definition Table: • 3 – Special Read Request
Trigger	1. The trigger for this transaction could be: a. Request from customer for a meter read, b. Requirement for disconnection read by User, or c. Customer Transfer 2. Change to Special Read requirement
Pre-conditions	1. None 2. Special Read Request has been raised
Post-conditions	1. Network Operator has logged Special Read Request and created Work Request for special read. 2. Network Operator has logged Special Read cancellation
Transaction acknowledgment specific event codes	3601, 3613, 3644, 3675, 3678 (Also the generic event codes 3603, 3659, 3662, 3673 can be used)

The SpecialReadRequest transaction is used by a User to request a special meter read from a Network Operator. It is also used to cancel an existing Special Read via an "actionType" attribute within the transaction element.

Transaction Data Elements

Transaction:	SpecialReadRequest
Received From:	User
Sent To:	Network Operator

Data Element	Victoria & SA/WA Mandatory / Optional / Not Required	Usage
ACTIONTYPE	M	• "NEW" FOR NEW SPECIAL READ REQUEST • "CANCEL" FOR SPECIAL READ CANCELLATION IMPLEMENTED AS AN ATTRIBUTE OF THE SPECIALREADREQUEST ASEXML ELEMENT.
NMI	M	
CHECKSUM	M	IMPLEMENTED AS AN ATTRIBUTE OF THE NMI ASEXML ELEMENT
SPECIALREAD REASONCODE	M	
SERVICEORDERNUMBER	M	REFERENCE NUMBER GENERATED BY THE USER (ALSO REFERRED TO AS 'RB REFERENCE NUMBER')
ACCESSDETAILS	O	OPTIONAL FREETEXT FIELD THAT MAYBE POPULATED AT CSR DISCRETION TO ASSIST METER READER IN GAINING ACCESS
APPOINTMENT DETAIL/ PREFERRED/ DATE	O	DATE OF APPOINTMENT FOR SPECIAL READ. REQUIRED FOR NEW SPECIAL READ REQUEST
APPOINTMENT DETAIL/ PREFERRED/ TIME	O	OPTIONAL FIELD FOR INPUT OF APPOINTMENT TIME IF APPLICABLE

The transaction is implemented as the SpecialReadRequest transaction in aseXML. This transaction is in the same format as the ServiceOrderRequest transaction. See section 4.2.3.4 for the generic format of the ServiceOrderRequest transaction.

XML Sample

```
<Header>
    <From description="">FBSTEST</From>
    <To description="">DEV</To>
    <MessageID>20120302181253634</MessageID>
    <MessageDate>2012-03-02T17:12:44+10:00</MessageDate>
    <TransactionGroup>MDMT</TransactionGroup>
    <Priority>Medium</Priority>
    <Market>SAGAS</Market>
</Header>
```

```xml
<Transactions>
    <Transaction transactionID="FBSTEST-20120302181244744" transactionDate="2012-03-02T17:12:44+10:00">
        <SpecialReadRequest version="r17" actionType="New">
            <ServiceOrder>
                <NMI checksum="7">5767656543</NMI>
                <ServiceOrderType xsi:type="ase:GasServiceOrderType" version="r13">
                    <SpecialReadReasonCode>Final Read</SpecialReadReasonCode>
                </ServiceOrderType>
                <ServiceOrderNumber>SO-5654311</ServiceOrderNumber>
            </ServiceOrder>
            <ServicePoint>
                <AccessDetails>Knock loudly</AccessDetails>
            </ServicePoint>
            <AppointmentDetail>
                <Preferred>
                    <Date>2012-03-09</Date>
                </Preferred>
            </AppointmentDetail>
        </SpecialReadRequest>
    </Transaction>
</Transactions>
```


4.1.5.2. SpecialReadResponse

Transaction Definition Table cross-reference	This interface realises the following transactions from the Transaction Definition Table: • 3A – Special Read Request Response, • 6 – Special Read Request No Access Advice
Trigger	1. Generation of Work Request in response to a MeterDataSpecialReadRequest 2. Special Read Cancelled or Attempted with No Access
Pre-conditions	1. Special Read Request logged by Network Operator 2. Network Operator has closed Work Request
Post-conditions	1. User has a Work Request number from the Network Operator 2. User closes Special Read Request
Transaction acknowledgment specific event codes	3602 (Also the generic event codes 3603, 3659, 3662, 3673 can be used)

The SpecialReadResponse transaction provides an initial response to a SpecialReadRequest transaction by supplying a Service Provider Reference number (a reference number provided by the Network Operator) to the requesting User. The transaction is then also used to provide closure of the Special Read Request if the meter reader is unable to access the meter on the given appointment date. If the Network Operator has raised the SpecialReadRequest for a transfer request 'Move In' the User will still expect a 'No Access' response if appropriate.

Transaction Data Elements

Transaction:	SpecialReadResponse
Received From:	Network Operator
Sent To:	User

Data Element	Victoria & SA/WA Mandatory / Optional / Not Required	Usage
RESPONSETYPE	M	• "INITIAL" FOR INITIAL RESPONSE • "CLOSURE" WHEN SPECIAL READ IS CLOSED WITH NO ACCESS OR CANCELLATION Implemented as an attribute of the SpecialReadResponse aseXML element.
NMI	M	
CHECKSUM	M	IMPLEMENTED AS AN ATTRIBUTE OF THE NMI ASEXML ELEMENT
SPECIALREAD REASONCODE	M	AS SUPPLIED IN THE REQUEST RECORD
METERSERIALNUMBER	O	REQUIRED FOR NO ACCESS RESPONSE
SERVICEORDERNUMBER	M	Reference number generated by the User. This is always Required if the User initiated the service order and provided the ServiceOrderNumber. For an implied Special Read Request (for a move in) the ServiceOrderNumber will always equal the transfer request ID allocated by tAEMO.
SERVICEPROVIDERREFERENCE	M	REFERENCE NUMBER GENERATED BY THE NETWORK OPERATOR
APPOINTMENT DETAIL/ PREFERRED/ DATE	O	REQUIRED FOR NO ACCESS RESPONSE
APPOINTMENT DETAIL/ PREFERRED/ TIME	O	REQUIRED IF SUPPLIED IN CORRESPONDING SERVICEORDERREQUEST TRANSACTION
REASONFORNOACCESS	O	REQUIRED FOR NO ACCESS RESPONSE
NEXTAVAILABLEREADDATE	O	REQUIRED FOR NO ACCESS RESPONSE
EVENT	O	MAY BE REPEATED ANY NUMBER OF TIMES.

The transaction is implemented as the SpecialReadResponse transaction in aseXML. This transaction is in the same format as the ServiceOrderResponse transaction. See section 4.2.3.5 for the generic format of the ServiceOrderResponse transaction.

The SpecialReadNoAccess element for this transaction is in the following format:

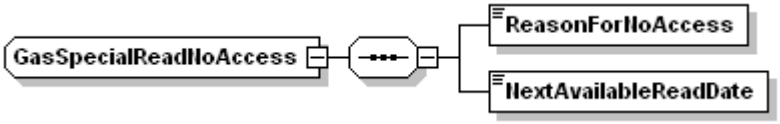

Figure 4-17 GasSpecialReadNoAccess type aseXML schema

XML Sample

Initial Response

```
<Header>
    <From description="Network Operator">XXXXXXXXXX</From>
    <To description="Retailer">XXXXXXXXXX</To>
    <MessageID>NETO-MSG-73645</MessageID>
    <MessageDate>2004-08-01T12:00:00+10:00</MessageDate>
    <TransactionGroup>MDMT</TransactionGroup>
    <Market>SAGAS</Market>
</Header>
<Transactions>
    <Transaction transactionID="NETO-TXN-46735" transactionDate="2004-08-01T12:00:00+10:00"
initiatingTransactionID="RETO-TXN-463547">
        <SpecialReadResponse version="r13" responseType="Initial">
            <ServiceOrder>
                <NMI checksum="2">3746584765</NMI>
                <ServiceOrderType xsi:type="ase:GasServiceOrderType">version="r13">
                    <SpecialReadReasonCode>Final Read</SpecialReadReasonCode>
                </ServiceOrderType>
                <ServiceOrderNumber>SO8765</ServiceOrderNumber>
                <ServiceProviderReference>WR1234</ServiceProviderReference>
            </ServiceOrder>
        </SpecialReadResponse>
    </Transaction>
</Transactions>
```

No Access Response

```
<Header>
    <From description="">FBSTEST</From>
    <To description="">DEV</To>
    <MessageID>20120302181501293</MessageID>
    <MessageDate>2012-03-02T17:14:47+10:00</MessageDate>
    <TransactionGroup>MDMT</TransactionGroup>
    <Priority>Low</Priority>
    <Market>SAGAS</Market>
</Header>
<Transactions>
    <Transaction transactionID="FBSTEST-20120302181447746" transactionDate="2012-03-
02T17:14:47+10:00" initiatingTransactionID="BLA-5fu0430v6231kv8h00000hag">
        <SpecialReadResponse version="r17" responseType="Closure">
            <ServiceOrder>
                <NMI checksum="7">5767656543</NMI>
                <ServiceOrderType xsi:type="ase:GasServiceOrderType" version="r13">
                    <SpecialReadReasonCode>Final Read</SpecialReadReasonCode>
                    <MeterSerialNumber>M1234</MeterSerialNumber>
                </ServiceOrderType>
                <ServiceOrderNumber>SO-5654311</ServiceOrderNumber>
                <ServiceProviderReference>WR-787654</ServiceProviderReference>
```

```
            </ServiceOrder>
            <AppointmentDetail>
                <Preferred>
                <Date>2012-03-09</Date>
                </Preferred>
            </AppointmentDetail>
            <NotificationData xsi:type="ase:GasServiceOrderNotificationData" version="r13">
                <NoAccess>
                    <SpecialReadNoAccess>
                    <ReasonForNoAccess>Gate Locked</ReasonForNoAccess>
                        <NextAvailableReadDate>2012-03-16</NextAvailableReadDate>
                    </SpecialReadNoAccess>
                </NoAccess>
            </NotificationData>
        </SpecialReadResponse>
    </Transaction>
</Transactions>
```


Special Read Cancellation Process

Cancellation of a Special Read

If the User identifies that the Special Read is no longer required, the User will forward a SpecialReadRequest transaction to the Network Operator with the actionType set to “Cancel” to identify that this is a cancellation.

If the Network Operator has received a cancellation notice from the User, the Network Operator will cancel the Special Read and forward a SpecialReadResponse to the User to confirm closure.

The response will contain a responseType set to "Closure" to identify that the Special Read is closed.

Examples of aseXML transactions

SpecialReadRequest – Original Request


```
<?xml version="1.0" encoding="UTF-8"?>
<ase:aseXML xmlns:ase="urn:aseXML:r13" xmlns:xsi="http://www.w3.org/2001/XMLSchema-instance"
xsi:schemaLocation="urn:aseXML:r13 http://www.nemmco.com.au/aseXML/schemas/r13/aseXML_r13.xsd">
 <Header>
     <From description="Alinta Sales">ALS</From>
     <To description="Alinta Netw orks">ALN</To>
     <MessageID>ALS-MSG-73645</MessageID>
     <MessageDate>2004-07-01T12:00:00+10:00</MessageDate>
     <TransactionGroup>MDMT</TransactionGroup>
     <Market>WAGAS</Market>
 </Header>
 <Transactions>
     <Transaction transactionID="ALS-TXN-46735" transactionDate="2004-07-01T12:00:00+10:00">
         <SpecialReadRequest version="r12" actionType="New">
             <ServiceOrder>
                 <NMI checksum="2">3746584765</NMI>
                 <ServiceOrderType xsi:type="ase:GasServiceOrderType" version="r13">
                     <SpecialReadReasonCode>Final Read</SpecialReadReasonCode>
                 </ServiceOrderType>
                 <ServiceOrderNumber>SO8765</ServiceOrderNumber>
             </ServiceOrder>
             <ServicePoint>
                 <AccessDetails>Be careful</AccessDetails>
```

```
                    </ServicePoint>
                    <AppointmentDetail>
                        <Preferred>
                            <Date>2004-07-05</Date>
                        </Preferred>
                    </AppointmentDetail>
                </SpecialReadRequest>
            </Transaction>
        </Transactions>
    </ase:aseXML>
```

SpecialReadResponse – Initial Response

```
<?xml version="1.0" encoding="UTF-8"?>
<ase:aseXML xmlns:ase="urn:aseXML:r13" xmlns:xsi="http://www.w3.org/2001/XMLSchema-instance"
xsi:schemaLocation="urn:aseXML:r13 http://www.nemmco.com.au/aseXML/schemas/r13/aseXML_r13.xsd">
    <Header>
        <From description="Alinta Networks">ALN</From>
        <To description="Alinta Sales">ALS</To>
        <MessageID>ALN-MSG-12345</MessageID>
        <MessageDate>2004-07-01T14:00:00+10:00</MessageDate>
        <TransactionGroup>MDMT</TransactionGroup>
        <Market>WAGAS</Market>
    </Header>
    <Transactions>
        <Transaction transactionID="ALN-TXN-12345" transactionDate="2004-07-01T14:00:00+10:00"
initiatingTransactionID="ALS-TXN-46735">
            <SpecialReadResponse version="r13" responseType="Initial">
                <ServiceOrder>
                    <NMI checksum="2">3746584765</NMI>
                    <ServiceOrderType xsi:type="ase:GasServiceOrderType" version="r13">
                        <SpecialReadReasonCode>Final Read</SpecialReadReasonCode>
                    </ServiceOrderType>
                    <ServiceOrderNumber>SO8765</ServiceOrderNumber>
                    <ServiceProviderReference>WR1234</ServiceProviderReference>
                </ServiceOrder>
            </SpecialReadResponse>
        </Transaction>
    </Transactions>
</ase:aseXML>
```

SpecialReadRequest – Cancellation Request

The Cancellation Request has an actionType of 'Cancel' and has the same ServiceOrderNumber as original request.

```
<?xml version="1.0" encoding="UTF-8"?>
<ase:aseXML xmlns:ase="urn:aseXML:r13" xmlns:xsi="http://www.w3.org/2001/XMLSchema-instance"
xsi:schemaLocation="urn:aseXML:r13 http://www.nemmco.com.au/aseXML/schemas/r13/aseXML_r13.xsd">
    <Header>
        <From description="Alinta Sales">ALS</From>
        <To description="Alinta Networks">ALN</To>
        <MessageID>ALS-MSG-99999</MessageID>
        <MessageDate>2004-07-02T12:00:00+10:00</MessageDate>
        <TransactionGroup>MDMT</TransactionGroup>
        <Market>WAGAS</Market>
    </Header>
    <Transactions>
        <Transaction transactionID="ALS-TXN-99999" transactionDate="2004-07-02T12:00:00+10:00">
            <SpecialReadRequest version="r12" actionType="Cancel">
                <ServiceOrder>
                    <NMI checksum="2">3746584765</NMI>
                    <ServiceOrderType xsi:type="ase:GasServiceOrderType" version="r13">
                        <SpecialReadReasonCode>Final Read</SpecialReadReasonCode>
                    </ServiceOrderType>
```

```
                <ServiceOrderNumber>SO8765</ServiceOrderNumber>
            </ServiceOrder>
            <ServicePoint>
                <AccessDetails>Be careful</AccessDetails>
            </ServicePoint>
            <AppointmentDetail>
                <Preferred>
                    <Date>2004-07-05</Date>
                </Preferred>
            </AppointmentDetail>
        </SpecialReadRequest>
    </Transaction>
  </Transactions>
</ase:aseXML>
```


SpecialReadResponse –Response Confirming Cancellation

The Response confirming cancellation has a responseType of 'Closure'. It has same Service Order Number as both of the requests, the same ServiceProviderReference as the initial response, but has the initiatingTransactionID of the Cancellation Request.


```
<?xml version="1.0" encoding="UTF-8"?>
<ase:aseXML xmlns:ase="urn:aseXML:r13" xmlns:xsi="http://www.w3.org/2001/XMLSchema-instance"
xsi:schemaLocation="urn:aseXML:r13 http://www.nemmco.com.au/aseXML/schemas/r13/aseXML_r13.xsd">
    <Header>
        <From description="Alinta Networks">ALN</From>
        <To description="Alinta Sales">ALS</To>
        <MessageID>ALN-MSG-67891</MessageID>
        <MessageDate>2004-07-02T14:00:00+10:00</MessageDate>
        <TransactionGroup>MDMT</TransactionGroup>
        <Market>WAGAS</Market>
    </Header>
    <Transactions>
        <Transaction transactionID="ALN-TXN-67891" transactionDate="2004-07-02T14:00:00+10:00"
initiatingTransactionID="ALS-TXN-99999">
            <SpecialReadResponse version="r13" responseType="Closure">
                <ServiceOrder>
                    <NMI checksum="2">3746584765</NMI>
                    <ServiceOrderType xsi:type="ase:GasServiceOrderType" version="r13">
                        <SpecialReadReasonCode>Final Read</SpecialReadReasonCode>
                    </ServiceOrderType>
                    <ServiceOrderNumber>SO8765</ServiceOrderNumber>
                    <ServiceProviderReference>WR1234</ServiceProviderReference>
                </ServiceOrder>
            </SpecialReadResponse>
        </Transaction>
    </Transactions>
</ase:aseXML>
```

4.1.6. Meter Data Verification

The Meter Data Verification transactions are used when a User needs to seek verification of the meter data from a Network Operator. This may be as the result of a customer complaint or an anomaly identified by the User.

The activity diagram below is a high level view of this process:

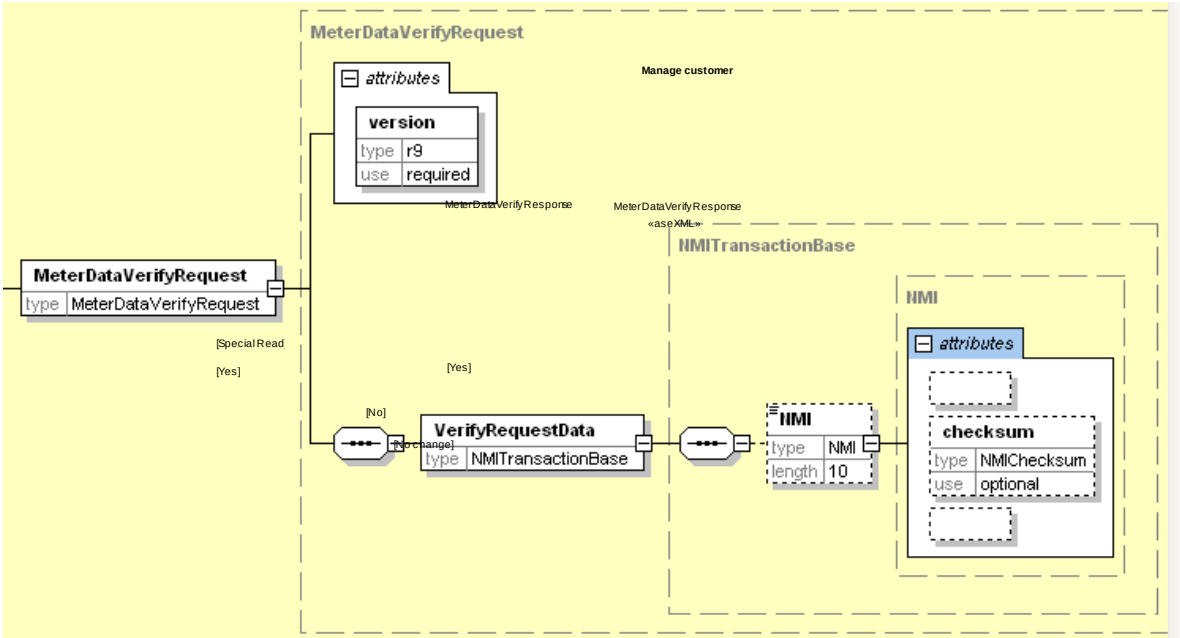

Figure 4-18 Meter Data Verification Activity Diagram

Process Sequence

When a User has a requirement to verify supplied meter data, the User generates a MeterDataVerifyRequest transaction and forwards it to the Network Operator. If the User has obtained or estimated a Meter Index Value that the User believes is more accurate than that supplied by the Network Operator, this Index Value may be provided in the transaction.

The diagram below shows the sequence of events for this transaction:

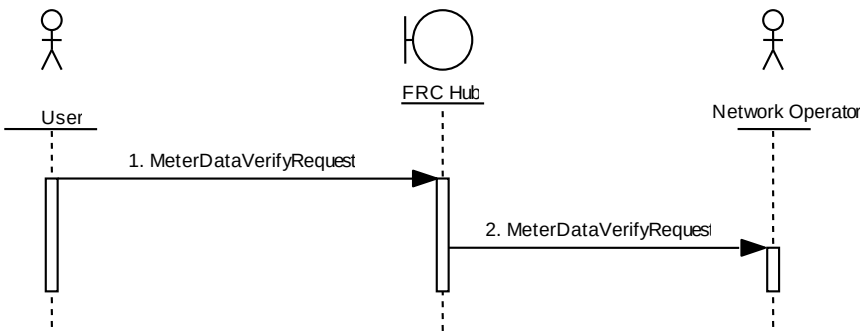

Figure 4-19 Meter Data Verification Request Sequence Diagram

ID	aseXML Transaction	From Object	To Object	Process Flow
1	MeterDataVerifyRequest	User	FRC Hub	REQ1
2	MeterDataVerifyRequest	FRC Hub	Network Operator	

On receipt of a MeterDataVerifyRequest transaction a Network Operator will determine the best course of action. If a proposed Meter Index Value has been supplied, the Network Operator may use this for a new energy calculation. Alternatively a Network Operator may choose to carry out a Special Read to obtain the correct Meter Index Value.

When the Network Operator has determined the correct meter data a MeterDataVerifyResponse transaction is generated and forwarded to the User. This transaction contains the current index value and an adjustment reason. If the data has not been adjusted the AdjustmentReason will be "No Change".

In addition, if an adjustment is required the adjusted energy data is forwarded to the User via a scheduled MeterDataNotification transaction. The adjusted data will supersede the data that was previously provided for the timeframe in question. However, depending on the process used by the Network Operator to obtain the adjusted data, the Current Read Date may differ from that provided in the superseded data. The User will have to decide how to use this data in the customer's billing cycle.

The diagram below shows the sequence of events for these transactions:

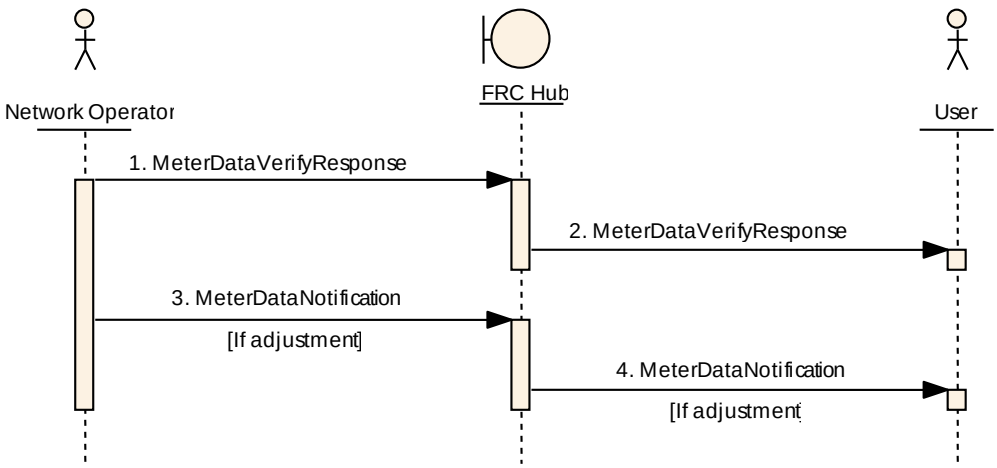

Figure 4-20 Meter Data Verification Response Sequence Diagram

ID	aseXML Transaction	From Object	To Object	Process Flow
1	MeterDataVerifyResponse	Network Operator	FRC Hub	REQ1
2	MeterDataVerifyResponse	FRC Hub	User	
3	MeterDataNotification (if adjusted)	Network Operator	FRC Hub	REQ1
4	MeterDataNotification (if adjusted)	FRC Hub	User	

4.1.6.1. MeterDataVerifyRequest

Transaction Definition Table cross-reference	This interface realises the following transactions from the Transaction Definition Table: • 242 – Meter Data Verification Request
Trigger	The trigger for this transaction could be: • a customer complaint • an anomaly identified by the User
Pre-conditions	Perceived inconsistency in a User's energy data
Post-conditions	Network Operator has logged a requirement for data verification.
Transaction acknowledgment specific event codes	3646, 3647, 3671 (Also the generic event codes 3603, 3659, 3662, 3673 can be used)

The MeterDataVerifyRequest transaction is used by a User to request confirmation of energy data as supplied by a Network Operator.

Transaction Data Elements

Transaction:	MeterDataVerifyRequest
Received From:	User
Sent To:	Network Operator

Data Element	Victoria and SA/WA Mandatory / Optional / Not Required	Usage
NMI	M	
CHECKSUM	M	IMPLEMENTED AS AN ATTRIBUTE OF THE NMI ASEXML ELEMENT
INITIATORREFERENCENUMBER	M	REFERENCE NUMBER GENERATED BY THE USER
CURRENTREAD/ INDEXVALUE	M	
CURRENTREAD/ READDATE	M	
PROPOSEDREAD/ INDEXVALUE	O	EITHER NONE OR BOTH OF THESE ELEMENTS MUST BE POPULATED.
PROPOSEDREAD/ READDATE	O	
INVESTIGATIONCODE	M	
INVESTIGATIONDESCRIPTION	O	FREE TEXT FIELD THAT MAY BE USED TO ASSIST AN INVESTIGATION

The transaction is implemented as the MeterDataVerifyRequest transaction in aseXML utilising the xsi:type="ase:GasMeterVerifyRequestData" construct for the VerifyRequestData element.

The transaction is in the following format:

Figure 4-21 MeterDataVerifyRequest aseXML schema

The GasMeterVerifyRequestData type construct is in the following format:

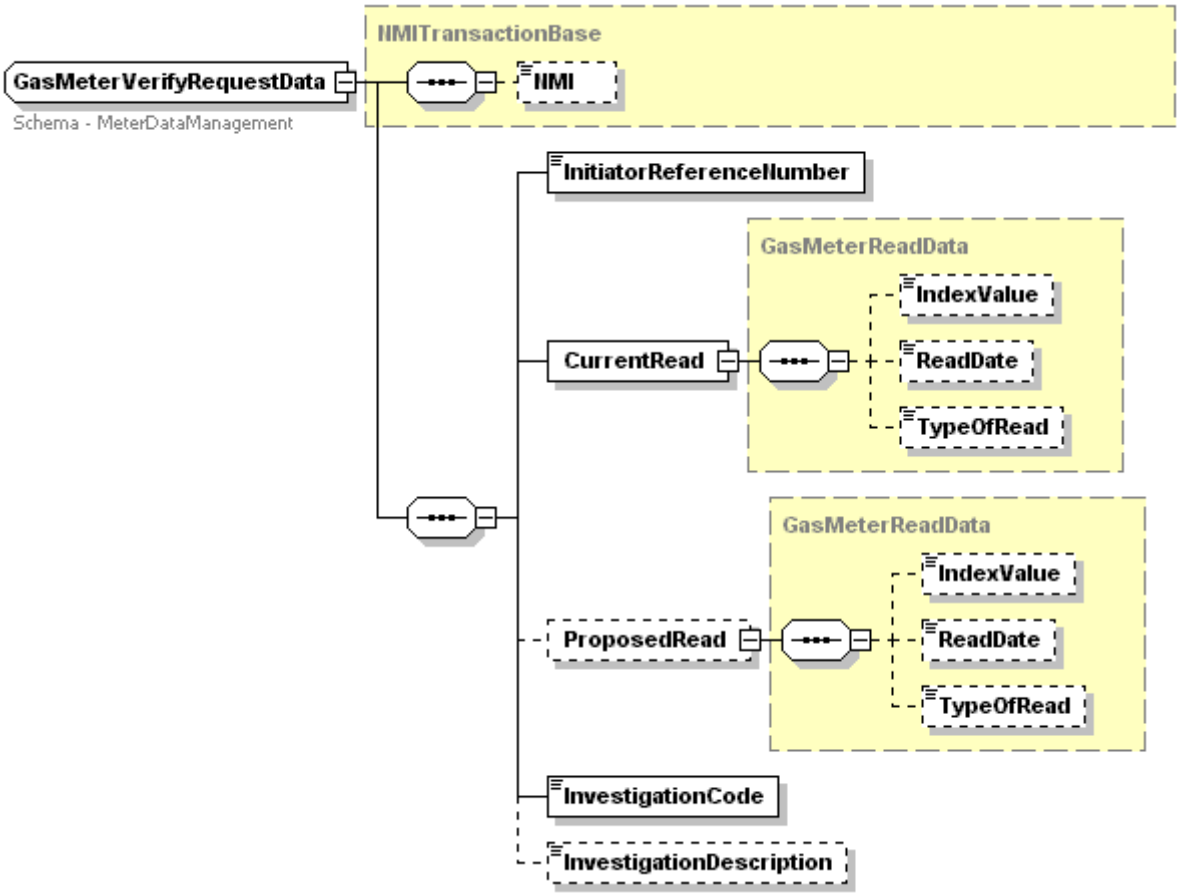

Figure 4-22 GasMeterVerifyRequestData type aseXML schema

XML Sample

```
<Header>
    <From description="">FBSTEST</From>
    <To description="">DEV</To>
    <MessageID>20120302161644328</MessageID>
    <MessageDate>2012-03-02T15:16:32+10:00</MessageDate>
    <TransactionGroup>MDMT</TransactionGroup>
    <Priority>Medium</Priority>
    <Market>SAGAS</Market>
</Header>
<Transactions>
```

```
    <Transaction transactionID="FBSTEST-20120302161632844" transactionDate="2012-03-
02T15:16:32+10:00">
        <MeterDataVerifyRequest version="r9">
            <VerifyRequestData xsi:type="ase:GasMeterVerifyRequestData" version="r17">
                <NMI checksum="7">5767656543</NMI>
                <InitiatorReferenceNumber>SO-5654311</InitiatorReferenceNumber>
                <CurrentRead>
                    <IndexValue>12300</IndexValue>
                    <ReadDate>2011-12-15</ReadDate>
                </CurrentRead>
                <ProposedRead>
                    <IndexValue>12284</IndexValue>
                    <ReadDate>2012-01-26</ReadDate>
                </ProposedRead>
                <InvestigationCode>Customer Away</InvestigationCode>
                <InvestigationDescription>Customer was on holiday for 3 weeks</InvestigationDescription>
            </VerifyRequestData>
        </MeterDataVerifyRequest>
    </Transaction>
</Transactions>
```


4.1.6.2. MeterDataVerifyResponse

Transaction Definition Table cross-reference	This interface realises the following transactions from the Transaction Definition Table: • 243 – Meter Data Verification Response
Trigger	The trigger for this transaction is a completed investigation following the receipt of a MeterDataGasVerifyDataRequest transaction
Pre-conditions	Network Operator has a confirmed meter index reading
Post-conditions	User has a confirmed meter index reading
Transaction acknowledgment specific event codes	3602 (Also the generic event codes 3603, 3659, 3662, 3673 can be used)

The MeterDataVerifyResponse transaction is used by a Network Operator to respond to a MeterDataVerifyRequest from a User.

Transaction Data Elements

Transaction:	MeterDataVerifyResponse
Received From:	Network Operator
Sent To:	User

Data Element	Victoria & SA/WA Mandatory / Optional / Not Required	Usage
NMI	M	AS INPUT IN THE REQUEST TRANSACTION

Transaction:	MeterDataVerifyResponse
Received From:	Network Operator
Sent To:	User

Data Element	Victoria & SA/WA Mandatory / Optional / Not Required	Usage
CHECKSUM	M	IMPLEMENTED AS AN ATTRIBUTE OF THE NMI ASEXML ELEMENT AS INPUT IN THE REQUEST TRANSACTION
INITIATORREFERENCENUMBER	M	AS INPUT IN THE REQUEST TRANSACTION
REVISEDREAD/ INDEXVALUE	M	
REVISEDREAD/ INDEXDATE	M	
ADJUSTMENTREASONCODE	M	IF = "NO CHANGE" THEN NO ADJUSTMENT IS REQUIRED
EVENT	O	MAY BE REPEATED ANY NUMBER OF TIMES. THE EVENT ELEMENT WILL IDENTIFY ANY ERRORS OCCURRING IN THE PROCESSING OF THE REQUEST RECORD.

The transaction is implemented as the MeterDataVerifyResponse transaction in aseXML utilising the xsi:type="ase:GasMeterVerifyResponseData" construct for the MeterVerifyResponseData element.

The transaction is in the following format:

Figure 4-23 MeterDataVerifyResponse aseXML schema

The GasMeterVerifyResponseData type construct is in the following format:

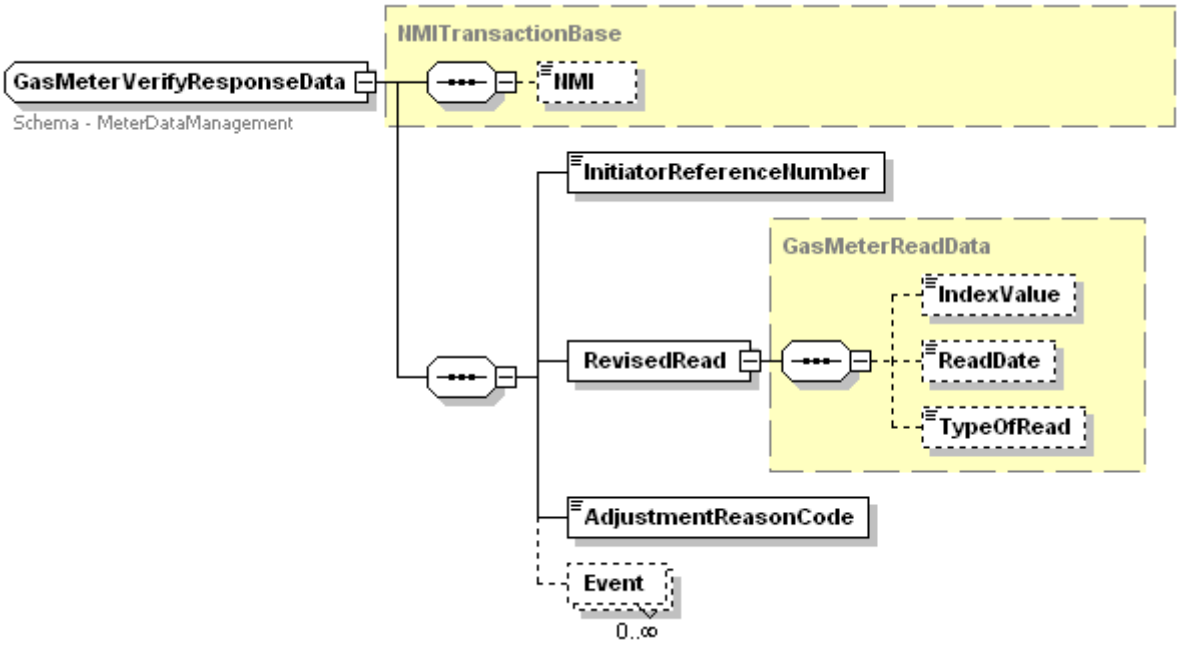

Figure 4-24 GasMeterVerifyResponseData type as eXML schema

XML Sample

Adjustment Required

```
<Header>
    <From description="Network Operator">XXXXXXXXXX</From>
    <To description="Retailer">XXXXXXXXXX</To>
    <MessageID>NETO-MSG-73645</MessageID>
    <MessageDate>2004-08-01T12:00:00+10:00</MessageDate>
    <TransactionGroup>MDMT</TransactionGroup>
    <Market>SAGAS</Market>
</Header>
<Transactions>
    <Transaction transactionID="NETO-TXN-46735" transactionDate="2004-08-01T12:00:00+10:00"
initiatingTransactionID="RETO-TXN-463547">
        <MeterDataVerifyResponse version="r9">
            <VerifyResponseData xsi:type="ase:GasMeterVerifyResponseData" version="r13">
                <NMI checksum="3">2837465876</NMI>
                <InitiatorReferenceNumber>R54326</InitiatorReferenceNumber>
                <RevisedRead>
                    <IndexValue>200</IndexValue>
                    <ReadDate>2004-08-01</ReadDate>
                </RevisedRead>
                <AdjustmentReasonCode>Over Estimate</AdjustmentReasonCode>
            </VerifyResponseData>
        </MeterDataVerifyResponse>
    </Transaction>
</Transactions>
```

No Adjustment Required

```
<Header>
    <From description="">FBSTEST</From>
    <To description="">DEV</To>
    <MessageID>20120302172017105</MessageID>
    <MessageDate>2012-03-02T16:20:03+10:00</MessageDate>
```

```
        <TransactionGroup>MDMT</TransactionGroup>
        <Priority>Low </Priority>
        <Market>SAGAS</Market>
    </Header>
    <Transactions>
        <Transaction transactionID="FBSTEST-20120302172003886" transactionDate="2012-03-
02T16:20:03+10:00" initiatingTransactionID="BLA-5fu0430v6231kv8h00000hag">
            <MeterDataVerifyResponse version="r9">
                <VerifyResponseData xsi:type="ase:GasMeterVerifyResponseData" version="r13">
                    <NMI  checksum="7">5767656543</NMI>
                    <InitiatorReferenceNumber>SO-5654311</InitiatorReferenceNumber>
                    <RevisedRead>
                        <IndexValue>12345</IndexValue>
                        <ReadDate>2012-03-02</ReadDate>
                    </RevisedRead>
                    <AdjustmentReasonCode>No Change</AdjustmentReasonCode>
                </VerifyResponseData>
            </MeterDataVerifyResponse>
        </Transaction>
    </Transactions>
```


4.1.7. Account Creation

When a customer transfers to a new (incoming) User the Network Operator passes the necessary data to the incoming User to enable that User to create an account for the customer (note: in South Australia, part of the data required by Users is provided through the MIRN Discovery Process). The Account Creation transaction contains some meter read data and some site data. The outgoing User is provided with the final meter read data as part of the process. Account Creation transactions are provided for both basic and interval meters.

The diagram below is a high level view of this process:

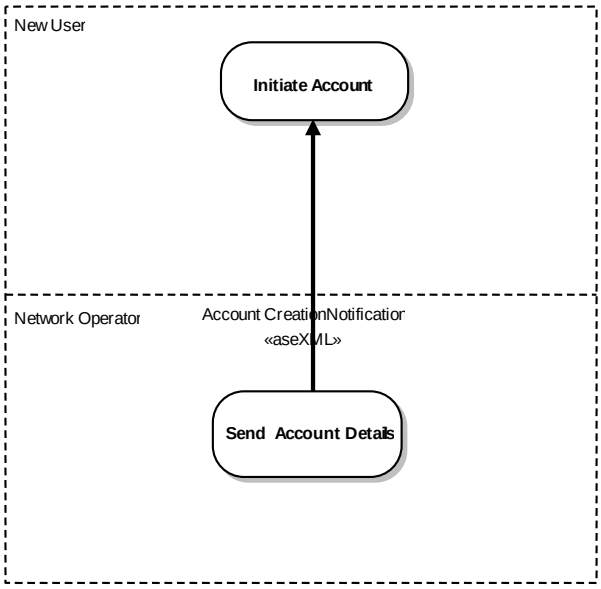

Figure 4-25 Account Creation Activity Diagram

Process Sequence

When a Network Operator receives confirmation from AEMO that the customer's transfer has been approved, the Network Operator forwards the required data to the incoming User via an AccountCreationNotification transaction. As part of this process, the final read energy record is forwarded to the current User /old User via a MeterDataNotification transaction.

The diagram below shows the sequence of events for this transaction:

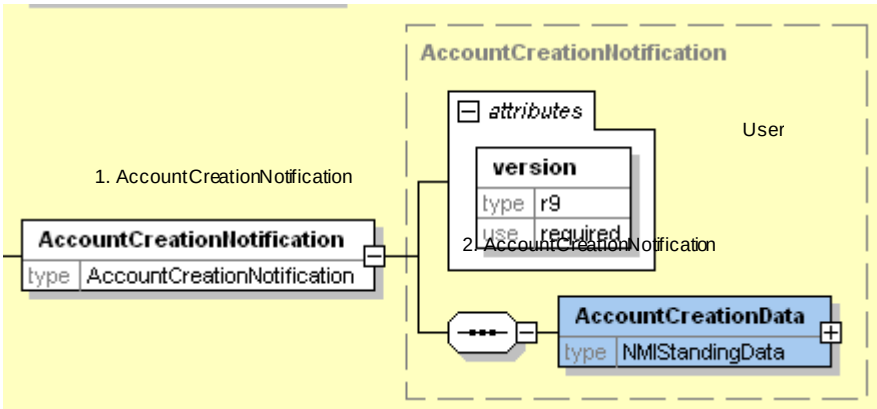

Figure 4-26 Account Creation Sequence Diagram

ID	AseXML Transaction	From Object	To Object	Process Flow
1	AccountCreationNotification	Network Operator	FRC Hub	MR5
2	AccountCreationNotification	FRC Hub	Incoming User/New User	

4.1.7.1. AccountCreationNotification

Transaction Definition Table cross-reference	This interface realises the following transactions from the Transaction Definition Table: • 12 – Account Creation transaction, • 231 – Account Creation transaction
Trigger	Network Operator receives a *transfer confirmation* from AEMO
Pre-conditions	Customer transfer request has been fully approved
Post-conditions	Incoming User/New User has required data to initiate an account.
Transaction acknowledgment specific event codes	3669 (Also the generic event codes 3603, 3659, 3662, 3673 can be used)

The AccountCreationNotification transaction provides the new User with sufficient data about a customer to create a new account.

Transaction Data Elements

Transaction:	AccountCreationNotification
Received From:	Network Operator
Sent To:	User

Data Element	SA & WA: Mandatory / Optional / Not Required	VIC: Mandatory / Optional / Not Required	Usage
NMI	M	M	
CHECKSUM	M	M	IMPLEMENTED AS AN ATTRIBUTE OF THE NMI ASEXML ELEMENT
METERSERIALNUMBER	M	M	
METERTYPESIZECODE	M	M	
CURRENT/INDEXVALUE	M	M	FOR INTERVAL METERS THIS MUST BE '0' IRRESPECTIVE OF THE ACTUAL INDEX METER READ (WA ONLY)
CURRENT/READDATE	M	M	FOR INTERVAL METERS THIS WILL BE SET TO THE TRANSFER DATE (WA ONLY)
SCHEDULEDREADINGDAYNUMBER	M	M	FOR INTERVAL METERS THIS WILL BE '00' (WA ONLY)
ACCESSDETAILS	O	O	OPTIONAL DATA THAT WILL BE PROVIDED IF AVAILABLE

Transaction:	AccountCreationNotification
Received From:	Network Operator
Sent To:	User

Data Element	SA & WA: Mandatory / Optional / Not Required	VIC: Mandatory / Optional / Not Required	Usage
MELWAYGRIDREFERENCE	O	O	OPTIONAL DATA THAT WILL BE PROVIDED IF AVAILABLE. NR IN WA OR SA.
METERPOSITION	O	O	OPTIONAL DATA THAT WILL BE PROVIDED IF AVAILABLE
ADDRESS	O	Not Included	REQUIRED IN WA. NOT REQUIRED IN SA
DISTRIBUTIONTARIFF	O	Not Included	REQUIRED IN WA. NOT REQUIRED IN SA.
HEATING VALUE ZONE	O	Not Included	REQUIRED IN WA. NOT REQUIRED IN SA.
TRANSMISSION ZONE	O	Not Included	REQUIRED IN WA. NOT REQUIRED IN SA.
MIRNSTATUS	O	Not Included	REQUIRED IN WA. NOT REQUIRED IN SA
PRESSURECORRECTION FACTOR	O	Not Included	REQUIRED IN WA. NOT REQUIRED IN SA
DOGCODE	O	Not Included	REQUIRED IN WA. NOT REQUIRED IN SA

In the above transaction, the elements shown as 'Not required' in SA are provided through MIRN Discovery.

The transaction is implemented as the AccountCreationNotification transaction in aseXML utilising the xsi:type="ase:GasStandingData" construct for the AccountCreationData element.

The transaction is in the following format:

Figure 4-27 AccountCreationNotification aseXML schema

See section 4.3.2.3 for the format of the GasStandingData type construct.

XML Sample

SA sample


```
<Header>
        <From description="">FBSTEST</From>
        <To description="">DEV</To>
        <MessageID>20120302150516961</MessageID>
        <MessageDate>2012-03-02T14:05:05+10:00</MessageDate>
        <TransactionGroup>MDMT</TransactionGroup>
        <Priority>Medium</Priority>
        <Market>SAGAS</Market>
</Header>
<Transactions>
        <Transaction transactionID="FBSTEST-20120302150505633" transactionDate="2012-03-
02T14:05:05+10:00">
            <AccountCreationNotification version="r9">
                <AccountCreationData xsi:type="ase:GasStandingData" version="r29">
                    <NMI  checksum="7">5767656543</NMI>
                    <MasterData>
                        <DistributionTariff>1V3N</DistributionTariff>
                        <TransmissionZone>12</TransmissionZone>
                        <HeatingValueZone>161</HeatingValueZone>
                        <MIRNStatus>Commissioned</MIRNStatus>
                    </MasterData>
                    <MeterData>
                        <MeterSerialNumber>M12345</MeterSerialNumber>
                        <PressureCorrectionFactor>1.0</PressureCorrectionFactor>
                        <MeterTypeSizeCode>BI4</MeterTypeSizeCode>
                        <MeterRead>
                            <Current>
                                <IndexValue>54345</IndexValue>
                                <ReadDate>2012-03-02</ReadDate>
                            </Current>
                        </MeterRead>
                        <BasicMeter>
                        <ScheduledReadingDayNumber>23</ScheduledReadingDayNumber>
                        </BasicMeter>
                    </MeterData>
                    <SiteData>
                        <Address>
                            <AustralianAddress>
                                <StructuredAddress>
                                    <House>
```

```
                <HouseNumber>1</HouseNumber>
            <HouseNumberSuffix>A</HouseNumberSuffix>
                </House>
                <Street>
                <StreetName>High</StreetName>
                <StreetType>ST</StreetType>
                </Street>
                </StructuredAddress>
            <SuburbOrPlaceOrLocality>Brompton</SuburbOrPlaceOrLocality>
                <StateOrTerritory>SA</StateOrTerritory>
                <PostCode>5007</PostCode>
            </AustralianAddress>
        </Address>
        <AccessDetails>Access information</AccessDetails>
        <DogCode>No  Dog</DogCode>
        <MeterPosition>BY</MeterPosition>
    </SiteData>
  </AccountCreationData>
</AccountCreationNotification>
</Transaction>
```

WA sample (with additional data elements)


```
<Header>
    <From description="Network Operator">XXXXXXXXXX</From>
    <To description="Retailer">XXXXXXXXXX</To>
    <MessageID>NETO-MSG-73645</MessageID>
    <MessageDate>2002-01-01T12:00:00+10:00</MessageDate>
    <TransactionGroup>MDMT</TransactionGroup>
    <Market>WAGAS</Market>
</Header>
<Transactions>
    <Transaction transactionID="TXUN-TXN-46735" transactionDate="2002-01-01T12:00:00+10:00">
        <AccountCreationNotification version="r9">
            <AccountCreationData xsi:type="ase:GasStandingData" version="r13">
                <NMI checksum="3">2456765432</NMI>
                <MasterData>
                    <DistributionTariff>1A1R</DistributionTariff>
                    <TransmissionZone>11</TransmissionZone>
                    <HeatingValueZone>121</HeatingValueZone>
                    <MIRNStatus>Commissioned</MIRNStatus>
                </MasterData>
                <MeterData>
                    <MeterSerialNumber>M1234</MeterSerialNumber>
                    <PressureCorrectionFactor>0.9</PressureCorrectionFactor>
                    <MeterTypeSizeCode>BM1</MeterTypeSizeCode>
                    <MeterRead>
                        <Current>
                            <IndexValue>0</IndexValue>
                            <ReadDate>2004-07-11</ReadDate>
                        </Current>
                    </MeterRead>
                    <BasicMeter>
                        <ScheduledReadingDayNumber>23</ScheduledReadingDayNumber>
                    </BasicMeter>
                </MeterData>
                <SiteData>
                    <Address>
                        <AustralianAddress>
                            <StructuredAddress>
                                <House>
                                    <HouseNumber>45</HouseNumber>
                                </House>
                                <Street>
                                    <StreetName>StGeorges</StreetName>
                                    <StreetType>ST</StreetType>
                                </Street>
                            </StructuredAddress>
                            <SuburbOrPlaceOrLocality>Perth</SuburbOrPlaceOrLocality>
                            <StateOrTerritory>WA</StateOrTerritory>
                            <PostCode>6000</PostCode>
                        </AustralianAddress>
                    </Address>
                    <AccessDetails>Be careful</AccessDetails>
                    <MeterPosition>BY</MeterPosition>
                </SiteData>
            </AccountCreationData>
        </AccountCreationNotification>
    </Transaction>
</Transactions>
```

4.2. Service Orders

4.2.1. Overview

Service Orders are the transactions between Users and Network Operators that manage the provision, maintenance and removal of gas services and meters. The following table shows the Service Orders group of aseXML transactions and the corresponding transactions from the Table of Transactions.

aseXML Transaction	Table of Transactions	
Transaction Name	**Ref No**	**Transaction Type**
ServiceOrderRequest	87	Meter Fix Request "A" or "B" Type
	101	Meter Change Request
	151	Meter Removal Request
	310	Service Connection Request
	312	Service Disconnection Request
	314	Service Orders for Priority C-K
	316	Relocate Service Connection Request
	318	Upgrade Service Size Request
	320	Upgrade Meter Size Request
ServiceOrderResponse	87A	Meter Fix Request "A" or "B" Type Response
	92	Meter Fix Completed
	93	No Access to complete Meter Fix
	101A	Meter Change Request Response
	104	No Access to complete Meter Change
	108	Meter Change Complete
	125	Meter Update Complete
	151A	Meter Removal Request Response
	154	No Access to complete Meter Removal
	157	Meter Removal Complete
	310A	Service Connection Request Response
	311	Service Connection Complete
	312A	Service Disconnection Request Response
	313	Service Disconnection Complete
	314A	Service Orders for Priority C-K Response
	315	Service Orders Complete for A-K
	316A	Relocate Service Connection Request Response
	317	Relocate Service Complete
	318A	Upgrade Service Size Request Response
	319	Upgrade Service Size Complete
	320A	Upgrade Meter Size Request Response
	321	Upgrade Meter Size Complete
FieldWorkNotification	136	Time Expired Meters Notification
	330	Notification of Mains/Service Renewal

The ServiceOrderRequest and ServiceOrderResponse transactions belong to the Service Orders (SORD) Transaction Group in aseXML.

The FieldWorkNotification transaction belongs to the Field Work (FLDW) Transaction Group in aseXML.

In general, Service Orders transactions are used by a User to request services other than Meter Reads from a Network Operator. The following section addresses that scenario.

However, Service Orders may also be:

- Generated by a Network Operator to as a result of a previous Service Order raised by User, but where additional or different work is required in the field to that required in the User's original request,
- Implied as a result of receiving a transfer request from a User. If, for example, the service requires recommissioning to effect a transfer,
- Generated by a Network Operator for internal purposes.

The subsequent section addresses these alternative scenarios.

Finally, the two remaining sections address:

- Time Expired Meters
- Mains/Service Renewal

4.2.2. Service Orders Generated by Users

This section applies to those Service Orders generated by Users. The high level process for User-generated Service Orders is shown in the following activity diagram.

Normal Process

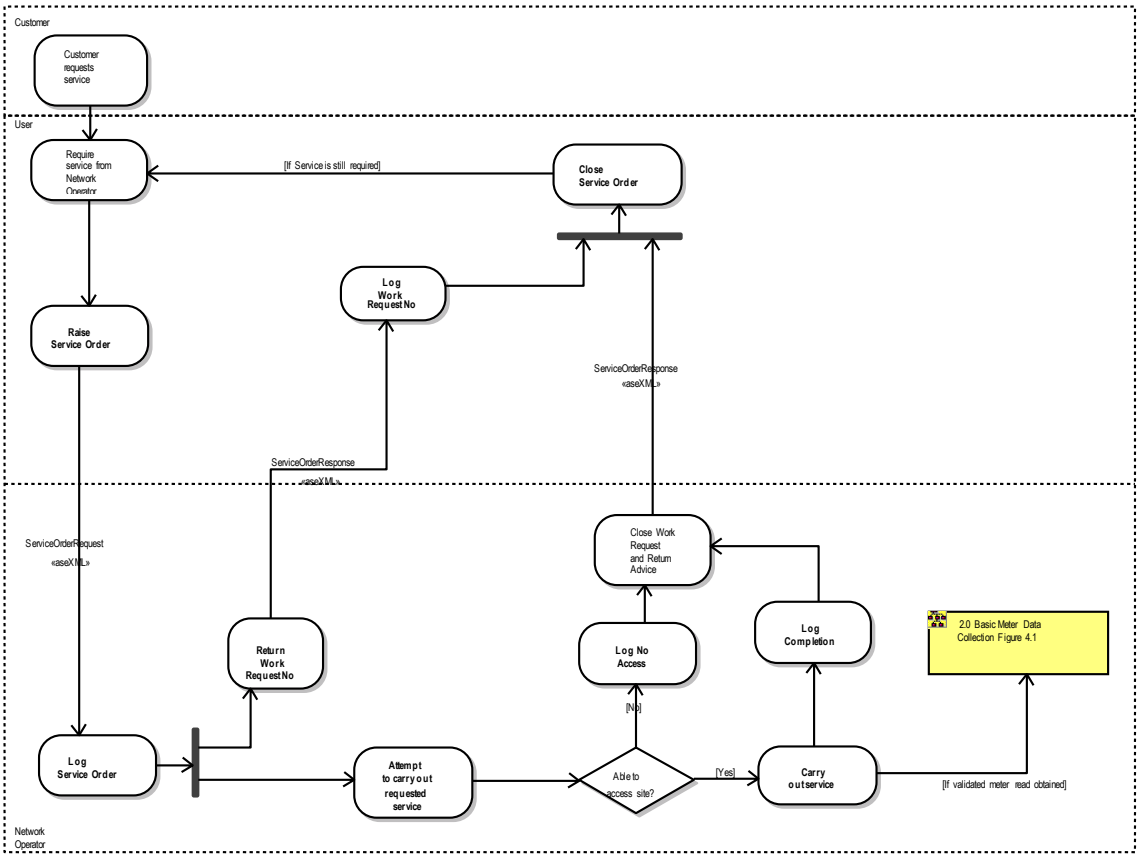

Figure 4-28 Service Orders Normal Activity Diagram

Cancellation Process

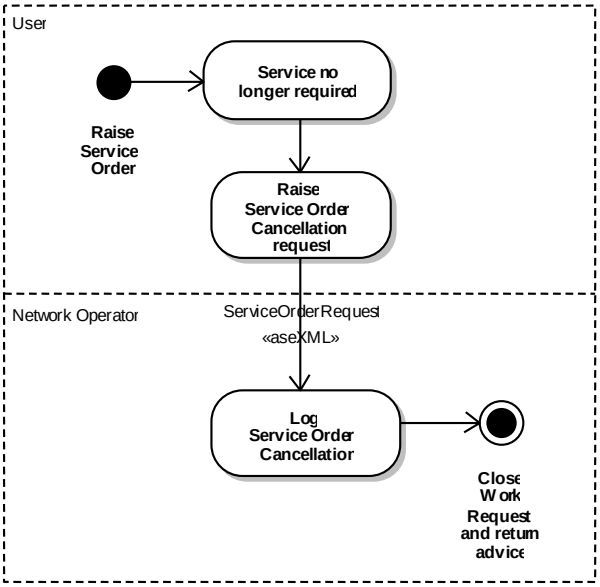

Figure 4-29 Service Orders Cancellation Activity Diagram

Process Sequence When a User requires a service from a Network Operator other than a Special Meter Reading, the User will raise a ServiceOrderRequest and forward it to the relevant Network Operator for action. The request will contain an actionType set to "New" to identify that this is a new Service Order.

When the Network Operator has received and logged the ServiceOrderRequest the Network Operator will generate a Work Request Number and return this number to the User for reference via a ServiceOrderResponse transaction. The response will contain a responseType set to "Initial" to identify that this is an initial response. The Network Operator will then attempt to satisfy the Service Order.

Note: Service order processes related to new connections for Industrial and Commercial (I&C) customers may not follow the steps in the above process diagram. For information on the South Australian process for I&C customers, see process flows in the 'FRC B2B Process Flow Diagrams document.

The diagram below shows the sequence of events for this transaction:

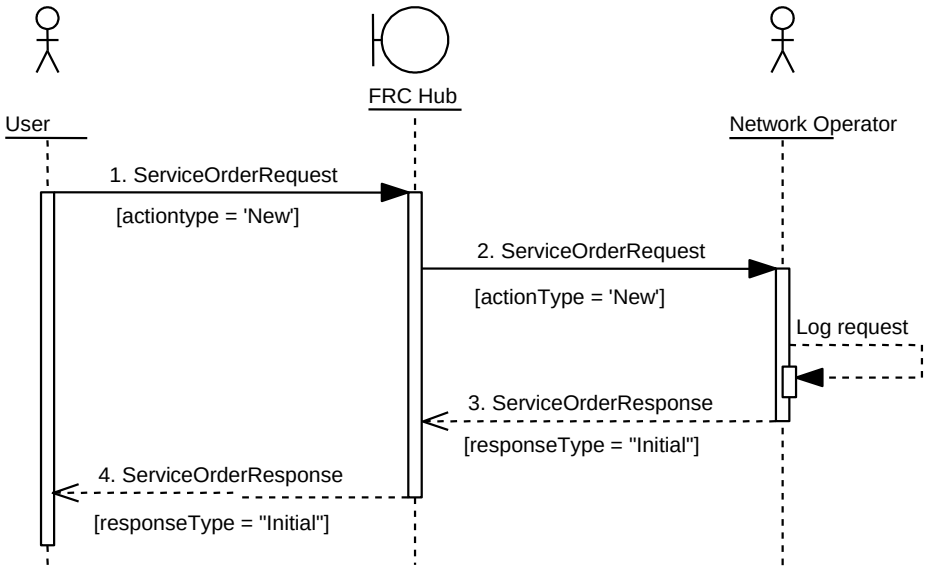

Figure 4-30 Service Order Initiation Sequence Diagram

ID	aseXML Transaction	From Object	To Object	Process Flow
1	ServiceOrderRequest	User	FRC Hub	REQ5A
2	ServiceOrderRequest	FRC Hub	Network Operator	
3	ServiceOrderResponse	Network Operator	FRC Hub	REQ5A
4	ServiceOrderResponse	FRC Hub	User	

If the User identifies that the service is no longer required, the User will forward a ServiceOrderRequest transaction to the Network Operator with the actionType set to "Cancel" to identify that this is a cancellation.

The diagram below shows the sequence of events for this transaction:

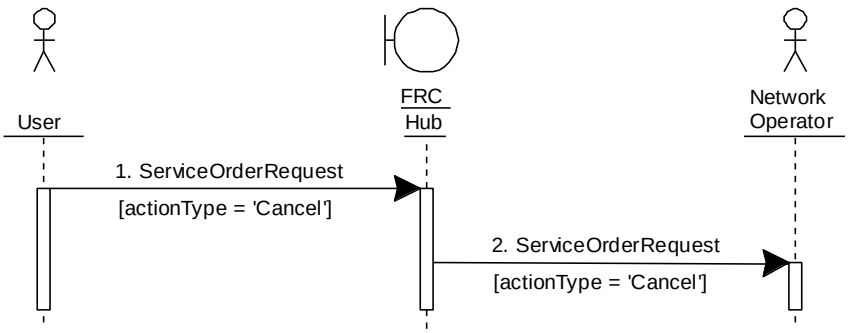

Figure 4-31 Service Order Cancellation Sequence Diagram

ID	aseXML Transaction	From Object	To Object	Process Flow
1	ServiceOrderRequest	User	FRC Hub	REQ5A
2	ServiceOrderRequest	FRC Hub	Network Operator	

Modification of a Service Order

A Service Order cannot be modified by the User once accepted by the Network Operator. If a User identifies a change to the Service Order requirements the User will cancel the original Service Order and create a new one.

Grounds for the Network Operator to Reject a Service Request

In certain circumstances, the Network Operator may reject a service request. When rejecting a request, the Network Operator will reply to the ServiceOrderRequest with a negative acknowledgement. Where required by the market procedures, this will have an event code describing the reason for the rejection of this service request.

No Access to Meter/Site

If, in the attempt to satisfy the Service Order, a Network Operator is unable to gain access to the site or meter, the Network Operator will forward a ServiceOrderResponse to the User detailing the inability to gain access and the reason why (using job completion codes). In this instance the Service Order Request is deemed to be satisfied, and the User must make another Service Order Request if the work is still required.

Cancellation of Service Requests by the User

If the Network Operator has received a cancellation notice from the User, the Network Operator will close the Work Request and forward a ServiceOrderResponse to the User to confirm closure.

Successful Completion of Service Request

If the Network Operator is able to complete the Service Order a ServiceOrderResponse transaction is forwarded to the User with the job conclusion details. The Service Order Response will contain the transaction ID of the original Request to enable the Retailer to link the Request and Response transactions together. This transaction ID is contained in the 'initiating transaction ID field' of the transaction header of the Service Order Response.

The Network Operator will provide the User with the "Service Order Completion" transaction for all Network Operator-initiated jobs that are site-specific and can be associated with a MIRN, excluding service renewal jobs.

In all the above instances the response will contain a responseType set to "Closure" to identify that the Service Order is closed.

Obtaining Meter Readings

Whenever a validated meter reading is obtained as part of the Service Order completion, including the removal and installation of a meter, the energy data for the MIRN is calculated and forwarded to the User via a MeterDataNotification transaction. The relevant meter read index values are also always provided in the Service Order Response transaction. The diagram below shows the sequence of events for this transaction:

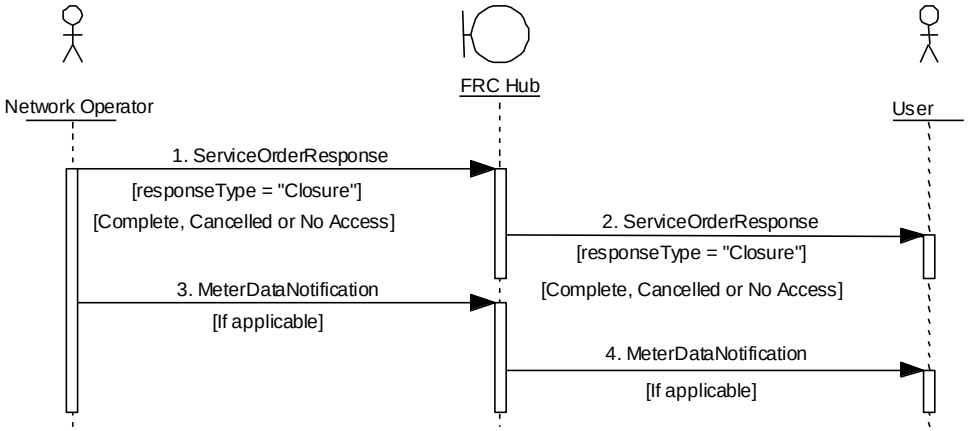

Figure 4-32 Service Order Closure Sequence Diagram

ID	aseXML Transaction	From Object	To Object	Process Flow
1	ServiceOrderResponse	Network Operator	FRC Hub	REQ5A
2	ServiceOrderResponse	FRC Hub	User	
3	MeterDataNotification (If applicable)	Network Operator	FRC Hub	REQ5A
4	MeterDataNotification (If applicable)	FRC Hub	User	

4.2.3. Alternative Service Order Scenarios

This section provides information on alternative service-order scenarios in which Service Orders are:

- Generated by a Network Operator as a result of a previous Service Order raised by User, but where additional or different work is required in the field to that required in the User's original request,
- 'Implied' as a result of receiving a transfer request from a User. If, for example, the service requires recommissioning to effect a transfer,
- Generated by a Network Operator for internal purposes.

This section does not repeat all of the information in the previous section but highlights the key differences between the user-generated Service Order processes and these alternative service-order scenarios.

4.2.3.1. If the Work Actually Performed Differs from that Requested

If the work actually performed by the Network Operator differs from that defined in the Service Order Request (for example, either different, or additional, work was actually required) then the Network Operator will close the original Service Order Request (sending the appropriate Service Order Response to the user), and then raise a new Network-Operator-generated Service Order Request.

As a result of raising the Network-Operator-generated Service Order Request, the Network Operator will then also return the appropriate Service Order Response to the User with the relevant Job Completion Codes. So that the Service Order Response can be identified by the retailer as a Network-Operator-generated Service Order, the 'initiating transaction ID' field in the transaction header and the Service Order Number field will be left blank.

4.2.3.2. Implied Service Orders

Service Orders can be implied from other transactions. For example, When a Network Operator receives a CATS Notification with a status of "Pending" and the MIRNStatus is "Decommissioned" the Network Operator will generate a Service Order to recommission the Service. Following completion of the work, the Network Operator will provide a ServiceOrderResponse transaction to the incoming user. The Service Order Response will contain the Transfer Request ID allocated by AEMO as the Service Order Number (note: the Service Order Response will not contain the transaction ID of the Transfer Request from AEMO in the transaction header). The response will contain a responseType set to "Closure".

It should be noted that the Network Operator may have to decommission the Service again if the transfer is cancelled. The Service Order to decommission the Service would be implied from the receipt of a cancellation notice from AEMO.

In the case of an implied service order to recommission the service, the corresponding MeterDataNotification transaction will be forwarded to the current user to provide the meter data and meter index. The Reason for Read in the MeterDataNotification will be set to "OSO" (for a RML or RSD) or INI (for a MRF), and the meter status will be set to "commissioned".

In the case of an Implied service order to decommission the service, the corresponding MeterDataNotification transaction will again be forwarded to the current user to provide the meter data and meter index. The Reason for Read in the MeterDataNotification will be set to "OSO" (for an AML or DSD), or REM (for a MRM) and the meter status will be set to "decommissioned".

4.2.3.3. Service Orders Generated by a Network Operator

Service Orders may be initiated by Network Operators for internal purposes. In these cases, the Network Operator will provide the User with the "Service Order Completion" transaction for all Network Operator-initiated jobs that are site-specific and can be associated with a MIRN, excluding service renewal jobs. The 'initiating transaction ID' field in the transaction header and the Service Order Number for these types of transactions will be left blank.

In all the above instances the response will contain a responseType set to "Closure" to identify that the Service Order is closed.

4.2.3.4. ServiceOrderRequest

Transaction Definition Table cross-reference	This interface realises the following transactions from the Transaction Definition Table: • 87 – Meter Fix Request "Simple" or "Complex" Type • 101 – Meter Change Request • 151 – Meter Removal Request • 310 – Service Connection Request • 312 – Service Disconnection Request • 314 – Service Orders for Priority C – K • 316 – Relocate Service Connection Request • 318 – Upgrade Service Size Request • 320 – Upgrade Meter Size Request
Trigger	1. User has a requirement for a Network Operator to supply a service 2. Change to Service Order requirement
Pre-conditions	1. None 2. Service Order Request has been raised 3. Service Order Request has been raised
Post-conditions	1. Network Operator has logged the Service Order and created Work Request 2. Network Operator has logged cancellation request

Transaction acknowledgment specific event codes	3601, 3604, 3608, 3613, 3616-3619, 3644, 3675 (Also the generic event codes 3603, 3659, 3662, 3673 can be used)

The ServiceOrderRequest transaction requests the provision of a service by a Network Operator. It is also used to cancel an existing Service Order via an "actionType" attribute within the transaction element.

Further detailed usage notes for the ServiceOrderRequest transaction are contained in the Service Order Specifications which are contained in the Specification Pack.

Note: where a ServiceOrderRequest transaction is provided to a Network Operator in South Australia, the Network Operator will use the CustomerCharacterisation field to provide the initial customer classification as prescribed under the National Energy Retail Law.

Transaction Data Elements

Transaction:	ServiceOrderRequest
Received From:	User
Sent To:	Network Operator

Data Element	Vic Mandatory / Optional / Not Required	Usage
ACTIONTYPE	M	"NEW" FOR NEW SERVICE ORDER "CANCEL" FOR SERVICE ORDER CANCELLATION IMPLEMENTED AS AN ATTRIBUTE OF THE SERVICEORDERREQUEST ASEXML ELEMENT.
NMI	O	MUST BE PROVIDED IF THE SERVICE ORDER IS RELATED TO A SPECIFIC NMI (SEE JOB ENQUIRY CODE/DATA ELEMENT MATRIX TO DETERMINE WHETHER THIS ELEMENT IS REQUIRED OR NOT)
CHECKSUM	O	REQUIRED IF NMI IS POPULATED. IMPLEMENTED AS AN ATTRIBUTE OF THE NMI ASEXML ELEMENT
SERVICEORDER/ ADDRESS	O	REQUIRED IF NMI IS NOT POPULATED, OTHERWISE NOT REQUIRED IMPLEMENTED IN THE ASEXML "ADDRESS" STRUCTURED FORMAT.

Transaction:	ServiceOrderRequest
Received From:	User
Sent To:	Network Operator

Data Element	Vic Mandatory / Optional / Not Required	Usage
JOBENQUIRYCODE	M	USED BY NETWORK OPERATOR TO DETERMINE WORK REQUIREMENT AND PRIORITY
SERVICEORDERNUMBER	M	REFERENCE NUMBER GENERATED BY THE USER
ACCESSDETAILS	O	OPTIONAL FIELD THAT MAY BE POPULATED AT CSR DISCRETION
MELWAY GRIDREFERENCE	O	OPTIONAL FIELD THAT MAY BE POPULATED AT CSR DISCRETION. THIS WILL NOT BE POPULATED IN SA OR WA.
CONTACT DETAIL/ PERSONNAME	O	SHOULD BE POPULATED IF AVAILABLE. REQUIRED FOR AN SCR IN SA UNLESS THE PLUMBER'S OR BUILDER'S NAME IS PROVIDED IN THE SORDSPECIALCOMMENTS /COMMENTLINE. IMPLEMENTED IN THE ASEXML "PERSONNAME" STRUCTURED FORMAT NOT TO BE RETAINED IN ANY DB SYSTEM AS A PERMANENT REFERENCE. IN WA, COMPULSORY FOR SCR, CLT OR ECO AND SHOULD INCLUDE EITHER CONSUMER (FOR EXISTING HOME) OR BUILDER. FOR DFC PROVIDE DETAILS OF PARTY COMPLAINING.

Transaction:	ServiceOrderRequest
Received From:	User
Sent To:	Network Operator

Data Element	Vic Mandatory / Optional / Not Required	Usage
CONTACT DETAIL/ PHONENUMBER	O	SHOULD BE POPULATED IF AVAILABLE. REQUIRED FOR AN SCR IN SA UNLESS THE PLUMBER'S OR BUILDER'S PHONE NUMBER IS PROVIDED IN THE SORDSPECIALCOMMENTS/ COMMENTLINE. IMPLEMENTED IN THE ASEXML "AUSTRALIANPHONENUMBER" STRUCTURED FORMAT. NOT TO BE RETAINED IN ANY DB SYSTEM AS A PERMANENT REFERENCE. IN WA, COMPULSORY FOR SCR, CLT OR ECO AND SHOULD INCLUDE EITHER CONSUMER (FOR EXISTING HOME) OR BUILDER. FOR DFC PROVIDE DETAILS OF PARTY COMPLAINING.
APPOINTMENTDETAIL/ PREFERRED/ DATE	M	
APPOINTMENTDETAIL/ PREFERRED/ TIME	O	OPTIONAL FIELD FOR INPUT OF APPOINTMENT TIME IF APPLICABLE. THE APPOINTMENT DATE WILL BE CONSIDERED AS THE EARLIEST CHANGE DATE. NOT USED IN WA.

Transaction:	ServiceOrderRequest
Received From:	User
Sent To:	Network Operator

Data Element	Vic Mandatory / Optional / Not Required	Usage
SORDSPECIALCOMMENTS/COMMENTLINE	O	OPTIONAL FIELD THAT MAY BE POPULATED AT THE CSR DISCRETION. IS REQUIRED TO CONTAIN THE PLUMBER'S OR BUILDER'S NAME AND PHONE NUMBER FOR AN SCR IN SA IF THE CONTACTDETAIL PERSONNAME AND CONTACTDETAIL PHONENUMBER ARE NOT PROVIDED
CUSTOMERCHARACTERISATION	O	REQUIRED IN SA FOR SERVICE CONNECTION REQUEST AND METER FIX CONNECTIONS (JOB ENQUIRY CODES = "SCR" OR "MFX"). NOT REQUIRED IN WA

Transaction:	ServiceOrderRequest
Received From:	User
Sent To:	Network Operator

Data Element	Vic Mandatory / Optional / Not Required	Usage
LOADDETAILS/PERHOUR	O	IN SA, REQUIRED FOR: • SERVICE CONNECTION REQUEST (JOB ENQUIRY CODE = "SCR") • BASIC METER FIX (JOB ENQUIRY CODE = "MFX") • BASIC METER CHANGE (JOB ENQUIRY CODE = "MCH") • SERVICE UPGRADE (JOB ENQUIRY CODE = "USR") • METER SIZE UPGRADE (JOB ENQUIRY CODE = "UMS") IN SA, THIS VALUE MUST BE POPULATED WITH VALUE OF 1 IF METERINLETPRESSURE IS POPULATED AND JOBENQUIRYCODE IS SET TO MRF. 'IN WA THIS IS REQUIRED FOR NEW CONNECTIONS (SCR, CLT & ECO) AND FOR UPGRADE OF METER SIZE OR PRESSURE (UMS). THE VALUE USED MUST BE THE ANTICIPATED MAXIMUM HOURLY LOAD IN MJ.

LOADDETAILS/PERANNUM	O	IN SA, REQUIRED WHERE CUSTOMERCHARACTERISATION IS A BUSINESS CUSTOMER (EG "METROPOLITIAN BUSINESS" "NON METROPOLITAN BUSINESS") (AND OPTIONAL WHERE CUSTOMERCHARACTERISATION IS A RESIDENTIAL CUSTOMER): SERVICE CONNECTION REQUEST (JOB ENQUIRY CODE = "SCR") BASIC METER FIX (JOB ENQUIRY CODE = "MFX") OPTIONAL FOR: • BASIC METER CHANGE (JOB ENQUIRY CODE = "MCH") • SERVICE UPGRADE (JOB ENQUIRY CODE = "USR") • METER SIZE UPGRADE (JOB ENQUIRY CODE = "UMS") IN WA REQUIRED FOR JOB ENQUIRY CODES "CLT", "ECO", "CLT", "UMS". IN WA OPTIONAL FOR "RML","MFX","SCF" "MTN" AND "RSD". OTHERWISE NOT REQUIRED IN SA OR WA. FOR COMPLIANCE WITH THE SCHEMA, IF A PLUMBERLICENCENUMBER IS PROVIDED, THEN LOADDETAILS/PERHOUR MUST BE POPULATED. FOR NEW INSTALLATIONS, THE LOADDETAILS/PERHOUR SHALL REFLECT THE ACTUAL REQUIREMENT. FOR RE-INSTATEMENT OF SERVICE AFTER A PERIOD GREATER THAN 730 DAYS, THE LOADDETAILS/PERHOU

Transaction:	ServiceOrderRequest
Received From:	User
Sent To:	Network Operator

Data Element	Vic Mandatory / Optional / Not Required	Usage
		R SHALL BE POPULATED WITH '0'.
METERINLETPRESSURE	O	IN SA, REQUIRED FOR: • METER FIX (JOB ENQUIRY CODE = "MFX") • METER SIZE UPGRADE (JOB ENQUIRY CODE = "UMS" OPTIONAL FOR: • SERVICE UPGRADE (JOB ENQUIRY CODE = "USR") • METER REFIX (JOB ENQUIRY CODE = "MRF") • SERVICE CONNECTION REQUEST = "SCR") IN SA, DEFAULT TO "1.1". IF THIS ELEMENT IS POPULATED TO JOBENQUIRYCODE OF MRF THEN LOADDETAILS/PERHOUR MUST ALSO BE POPULATED WITH VALUE OF 1. IN WA THIS IS REQUIRED FOR NEW CONNECTIONS (SCR, CLT & ECO) AND FOR UPGRADE OF METER SIZE OR PRESSURE (UMS). THE VALUE USED MUST BE THE REQUIRED METER INLET PRESSURE WHICH WILL BE DEFAULTED TO 2.75 KPA OR (1.25 KPA IN LOW PRESSURE AREAS).

Transaction:	ServiceOrderRequest
Received From:	User
Sent To:	Network Operator

Data Element	Vic Mandatory / Optional / Not Required	Usage
COCNUMBER	O	NOT USED IN SA. REQUIRED FOR: VIC STANDARD ("A" TYPE) METER FIX IN MILDURA). REQUIRED IN WA ONLY FOR SCR OR CLT IF THERE ARE TYPE B APPLIANCES, WITH THE GF LICENCE NUMBER (NUMERIC COMPONENT ONLY) OF THE PARTY RESPONSIBLE FOR APPLIANCE CERTIFICATION. OTHERWISE, FOR COMPLIANCE WITH ASEXML SCHEMA, THE ELEMENT MUST BE PRESENT IN WA TRANSACTIONS WHERE THE PLUMBERLICENCENUMBER IS POPULATED BUT MUST ALWAYS BE '0'.
PLUMBERLICENCENUMBER	O	NOT USED IN SA. REQUIRED FOR: VIC STANDARD ("A" TYPE) METER FIX IN MILDURA). IN WA, REQUIRED FOR A NEW CONNECTION REQUEST (SCR) AND FOR JOB ENQUIRY CODES "CLT" AND "ECO" WITH THE GF LICENCE NUMBER (THE LAST 5 DIGITS OF THE NUMERIC COMPONENT) OF THE GAS FITTER. REQUIRED FOR RML, MTN AND RSD IF THE MIRN HAS BEEN DECOMMISSIONS FOR >730 DAYS
STARTWORKNOTICENUMBER	O	Not used in SA or WA.
DATETIMECSRACCESSEDCUSTOMERRECORD	M	

Transaction:	ServiceOrderRequest
Received From:	User
Sent To:	Network Operator

Data Element	Vic Mandatory / Optional / Not Required	Usage
DATETIME CSRPROC ESSEDTRA NSACTION	M	

The transaction is implemented as the ServiceOrderRequest transaction in aseXML utilising the xsi:type="ase:GasServiceOrderType" construct for the ServiceOrderType element and xsi:type="ase:GasServiceOrderDetails" construct for the RequestData element.

The ServiceOrderRequest transaction is in the following format:

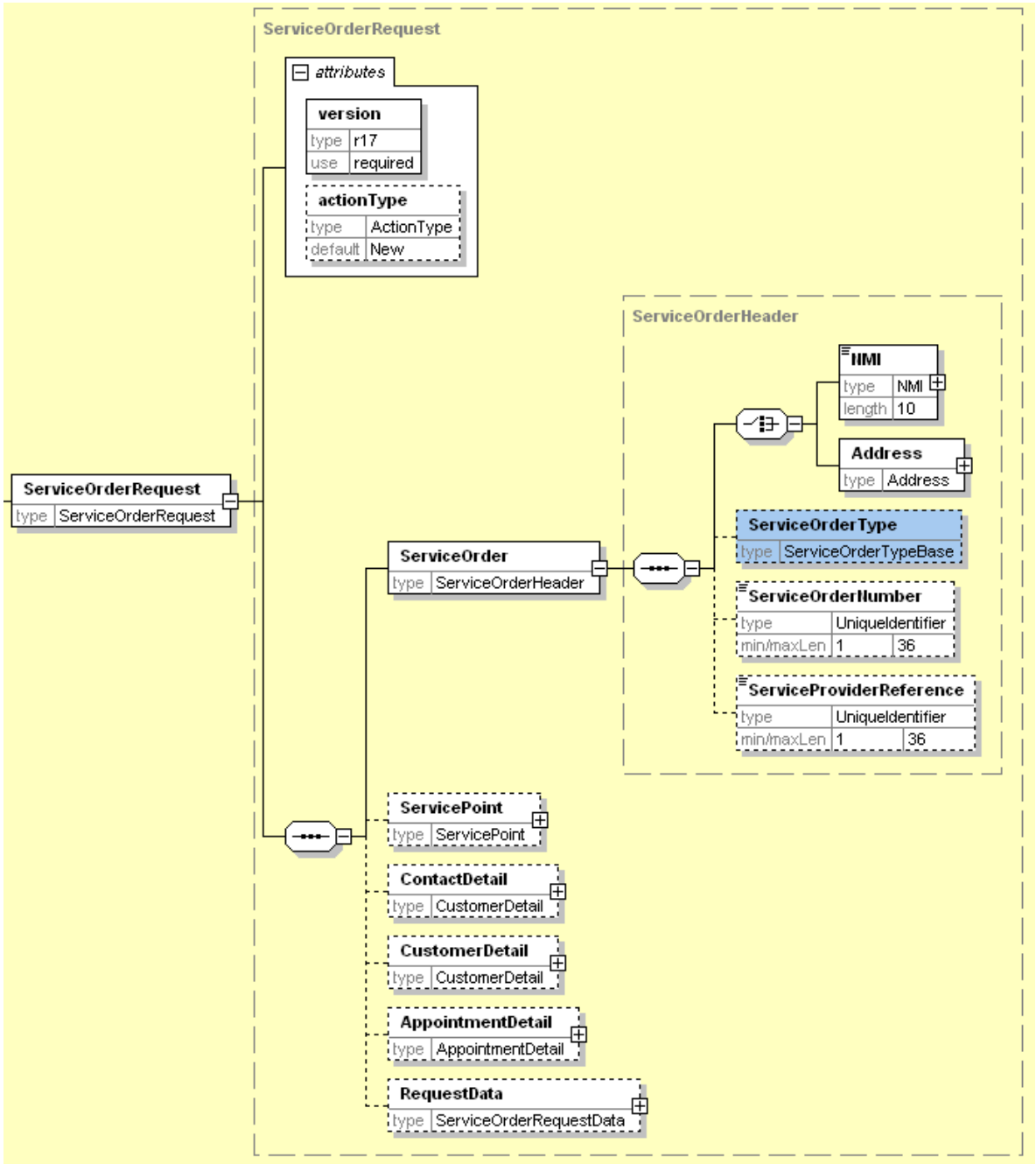

Figure 4-33 ServiceOrderRequest aseXML schema

The GasServiceOrderType type construct is in the following format:

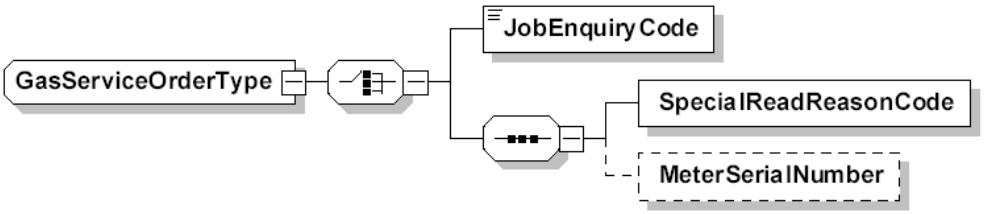

Figure 4-34 GasServiceOrderType type as eXML schema

The GasServiceOrderDetails type construct is in the following format:

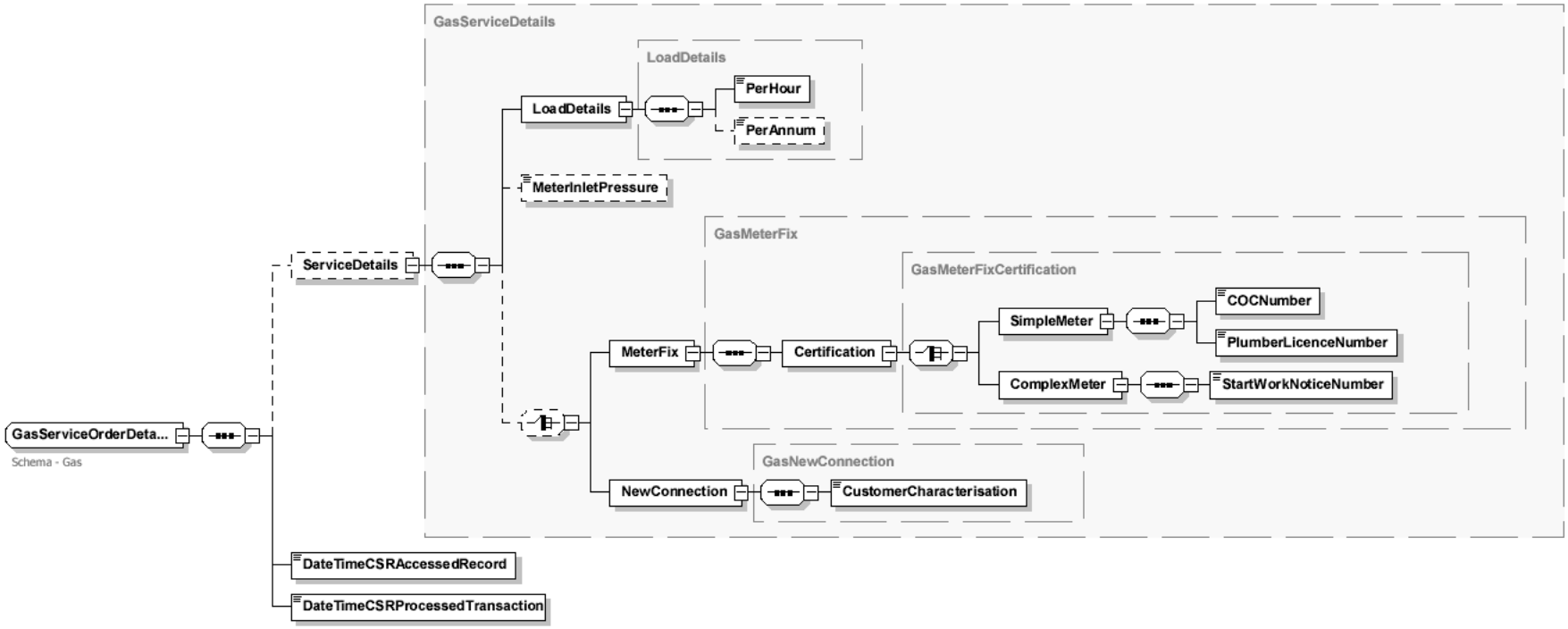

Figure 4-35 GasServiceOrderDetails type as eXML schema

XML Samples


```
<Header>
    <From description="">FBSTEST</From>
    <To description="">DEV</To>
    <MessageID>20120302180830971</MessageID>
    <MessageDate>2012-03-02T17:08:17+10:00</MessageDate>
    <TransactionGroup>SORD</TransactionGroup>
    <Priority>Medium</Priority>
    <Market>SAGAS</Market>
</Header>
<Transactions>
    <Transaction transactionID="FBSTEST-20120302180817221" transactionDate="2012-03-02T17:08:17+10:00">
        <ServiceOrderRequest version="r17" actionType="New">
            <ServiceOrder>
                <Address>
                    <AustralianAddress>
                        <StructuredAddress>
                            <House>
                                <HouseNumber>45</HouseNumber>
                                <HouseNumberSuffix>A</HouseNumberSuffix>
                            </House>
                            <Street>
                                <StreetName>High</StreetName>
                                <StreetType>ST</StreetType>
                            </Street>
                        </StructuredAddress>
                        <SuburbOrPlaceOrLocality>GLEN IRIS</SuburbOrPlaceOrLocality>
                        <StateOrTerritory>VIC</StateOrTerritory>
                        <PostCode>3108</PostCode>
                    </AustralianAddress>
                </Address>
                <ServiceOrderType xsi:type="ase:GasServiceOrderType" version="r13">
                    <JobEnquiryCode>MFX</JobEnquiryCode>
                </ServiceOrderType>
                <ServiceOrderNumber>A3798798</ServiceOrderNumber>
            </ServiceOrder>
            <ContactDetail>
                <PersonName>
                    <NameTitle>Miss</NameTitle>
                    <GivenName>Jennifer</GivenName>
                    <FamilyName>Munro</FamilyName>
                </PersonName>
                <PhoneNumber  serviceType="Mobile Voice">
                    <Prefix>03</Prefix>
                    <Number>98761234</Number>
                </PhoneNumber>
            </ContactDetail>
            <AppointmentDetail>
                <Preferred>
                    <Date>2011-08-23</Date>
                    <Time>18:21:37+10:00</Time>
                </Preferred>
            </AppointmentDetail>
            <RequestData xsi:type="ase:GasServiceOrderDetails" version="r27">
                <SpecialInstructions>
                    <CommentLine>This  job must be given highest priority</CommentLine>
                    <CommentLine>Repeat:  highest priority</CommentLine>
                </SpecialInstructions>
                <ServiceDetails>
                    <LoadDetails>
                        <PerHour>310</PerHour>
                    </LoadDetails>
                    <MeterInletPressure>1.37</MeterInletPressure>

                </ServiceDetails>
                <DateTimeCSRAccessedRecord>2011-08-01T16:21:22+10:00</DateTimeCSRAccessedRecord>
                <DateTimeCSRProcessedTransaction>2011-08-
01T16:21:22+10:00</DateTimeCSRProcessedTransaction>
```

```
            </RequestData>
        </ServiceOrderRequest>
    </Transaction>
</Transactions>
```

The following are several examples of structured address usage. Below is a simple address:

```
<Address>
    <AustralianAddress>
        <StructuredAddress>
            <House>
                <HouseNumber>11</HouseNumber>
            </House>
            <Street>
                <StreetName>WHY</StreetName>
                <StreetType>CRSS</StreetType>
            </Street>
        </StructuredAddress>
        <SuburbOrPlaceOrLocality>CHICKEN  CROSS  ROAD</SuburbOrPlaceOrLocality>
        <StateOrTerritory>VIC</StateOrTerritory>
        <PostCode>3333</PostCode>
    </AustralianAddress>
</Address>
```

Here is an example of usage of a structured address with apartment, floor, building name and lot.

```
<Address>
    <AustralianAddress>
        <StructuredAddress>
            <FlatOrUnit>
                <FlatOrUnitType>APT</FlatOrUnitType>
                <FlatOrUnitNumber>5</FlatOrUnitNumber>
            </FlatOrUnit>
            <FloorOrLevel>
                <FloorOrLevelType>G</FloorOrLevelType>
            </FloorOrLevel>
            <BuildingOrPropertyName>BUILDING  A</BuildingOrPropertyName>
            <Street>
                <StreetName>WALNUT</StreetName>
                <StreetType>RIDE</StreetType>
            </Street>
        </StructuredAddress>
        <SuburbOrPlaceOrLocality>SUNSHINE</SuburbOrPlaceOrLocality>
        <StateOrTerritory>WA</StateOrTerritory>
        <PostCode>6333</PostCode>
    </AustralianAddress>
</Address>
```

The following is a sample of an aseXML structured address using a location descriptor:

```
<Address>
    <AustralianAddress>
        <StructuredAddress>
            <LocationDescriptor>CORNER</LocationDescriptor>
            <Street>
                <StreetName>FIRST</StreetName>
                <StreetType>ST</StreetType>
            </Street>
            <Street>
                <StreetName>SECOND</StreetName>
                <StreetType>AVE</StreetType>
                <StreetSuffix>SW</StreetSuffix>
            </Street>
```

```
            </StructuredAddress>
            <SuburbOrPlaceOrLocality>BRIGHTON</SuburbOrPlaceOrLocality>
            <StateOrTerritory>WA</StateOrTerritory>
            <PostCode>8333</PostCode>
        </AustralianAddress>
    </Address>
```

4.2.3.5. ServiceOrderResponse

Transaction Definition Table cross-reference	This interface realises the following transactions from the Transaction Definition Table: • 87A – Meter Fix Request "Simple" or "Complex" Type Response • 92 – Meter Fix Complete • 93 – No Access to Complete Meter Fix • 101A – Meter Change Request Response • 104 – No Access to Complete Meter Change • 108 – Meter Change Completed • 125 – Meter Upgrade Completed • 151A – Meter Removal Request Response • 154 – No Access to Complete Meter Removal • 157 – Meter Removal Complete • 310A – Service Connection Request Response • 311 - Service Connection Complete • 312A – Service Disconnection Request Response • 313 - Service Disconnection Complete • 314A – Service Orders for Priority C– K Response • 315 - Service Orders Completed for Priority A -K • 316A – Relocate Service Connection Request Response • 317 - Relocate Service Complete • 318A – Upgrade Service Size Request Response • 319 - Upgrade Service Size Complete • 320A – Upgrade Meter Size Request Response • 321 - Upgrade Meter Size Complete
Trigger	1. Work Request Number generated 2. Service Order Completed, Cancelled, or Attempted with No Access
Pre-conditions	1. Network Operator has logged Service Order Request and generated Work Request Number 2. Network Operator has closed Work Request

Post-conditions	3. User has logged Work Request Number 4. User has closed Service Order
Transaction acknowledgment specific event codes	3602(not applicable for DB initiated Service Orders), 3609, 3610, 3622, 3624-3637 (Also the generic event codes 3603, 3659, 3662, 3673 can be used)

The ServiceOrderResponse transaction is used during a Service Order initiation to supply the requestor with the recipients Work Request Number. Once the Service Order is satisfied, attempted with no access, or cancelled by the User the transaction is used to provide closure to the process.

Further detailed usage notes for the ServiceOrderResponse transaction are contained in the Service Order Specificationswhich are contained in the Specification Pack.

Transaction Data Elements

Transaction:	ServiceOrderResponse
Received From:	Network Operator
Sent To:	User

Data Element	SA/WA Mandatory/ Optional / Not Required	Victoria Mandatory/ Optional/ Not Required	Usage
RESPONSETYPE	M	M	• "INITIAL" FOR INITIAL RESPONSE • "CLOSURE" WHEN SERVICE ORDER IS CLOSED Implemented as an attribute of the ServiceOrderResponse aseXML element.

Transaction:	ServiceOrderResponse
Received From:	Network Operator
Sent To:	User

Data Element	SA/WA Mandatory/ Optional / Not Required	Victoria Mandatory/ Optional/ Not Required	Usage
NMI	O	O	REQUIRED WHEN SUPPLIED BY THE USER IN THE SERVICE ORDER REQUEST. REQUIRED ON COMPLETION OF A METER FIX (JOB ENQUIRY CODE = "MFX") REGARDLESS OF WHETHER PROVIDED IN THE SERVICE ORDER REQUEST OR NOT. REQUIRED WHEN THE SERVICE ORDER WORK AFFECTED A SPECIFIC NMI REGARDLESS OF WHETHER PROVIDED IN THE SERVICE ORDER REQUEST OR WHETHER THE SERVICE ORDER WAS INITIATED BY THE NETWORK OPERATOR. OPTIONAL FOR SERVICE CONNECTION (JOB ENQUIRY CODE = "SCR") OTHERWISE NOT REQUIRED.
CHECKSUM	O	O	REQUIRED IF MIRN IS POPULATED. IMPLEMENTED AS AN ATTRIBUTE OF THE MIRN ASEXML ELEMENT
ADDRESS	O	O	Required if MIRN not populated. Implemented in the aseXML "Address" structured format
JOBENQUIRYCODE	M	M	USED BY NETWORK OPERATOR TO DETERMINE WORK REQUIREMENT AND PRIORITY

Transaction:	ServiceOrderResponse
Received From:	Network Operator
Sent To:	User

Data Element	SA/WA Mandatory/ Optional / Not Required	Victoria Mandatory/ Optional/ Not Required	Usage
SERVICEORDERNUMBER	O	O	A REFERENCE NUMBER GENERATED BY A USER. THIS NUMBER IS ALWAYS REQUIRED WHEN A USER INITIATED THE SERVICE ORDER AND PROVIDED THE SERVICE ORDER NUMBER. FOR AN IMPLIED SERVICE ORDER, THE SERVICE ORDER NUMBER WILL ALWAYS EQUAL THE TRANSFER REQUEST ID ALLOCATED BYAEMO.
SERVICEPROVIDERREFERENCE	M	M	Network Operator's Work Request Number
APPOINTMENTDETAIL/PREFERRED/DATE	O	O	Required for Initial response for Service Connection Request (Job Enquiry Code = SCR) and No Access response to all Service Order Requests. Not used in WA.
APPOINTMENTDETAIL/PREFERRED/TIME	O	O	Required for No Access response if supplied in request transaction
DATESERVICEORDERCOMPLETED	O	O	Required if Service Order completed
TIMESERVICEORDERCOMPLETED	O	O	Optional if Service Order completed
REMOVED/METERSERIALNUMBER	O	O	Required whenever a meter is removed as part of the Service Order completion
REMOVED/METERREAD/CURRENT/INDEXVALUE	O	O	Required whenever a meter is removed as part of the Service Order completion. If supplied will result in the provision of energy data for this MIRN via a MeterDataNotification transaction.

Transaction:	ServiceOrderResponse
Received From:	Network Operator
Sent To:	User

Data Element	SA/WA Mandatory/ Optional / Not Required	Victoria Mandatory/ Optional/ Not Required	Usage
NEW/ METERSERIALNUMBER	O	O	Required whenever a new meter is fitted as part of the Service Order completion
NEW/ PRESSURECORRECTIONFACTOR	O	O	Required whenever a new meter is fitted as part of the Service Order completion
NEW/ METERTYPESIZECODE	O	O	Required whenever a new meter is fitted as part of the Service Order completion
NEW/ METERREAD/ CURRENT/ INDEXVALUE	O	O	Required whenever a new meter is fitted as part of the Service Order completion. If supplied will result in the provision of energy data for this MIRN via a MeterDataNotification transaction.
NEW/ BASICMETER/ NEXTSCHEDULEDREADDATE	O	O	Required for Meter Fix (Job Enquiry Code = "MFX")
NEW/ BASICMETER/ SCHEDULEDREADINGDAYNUMBER	O	O	Required for Meter Fix (Job Enquiry Code = "MFX")
CURRENT/ METERREAD/ CURRENT/ INDEXVALUE	O	O	Required whenever a validated meter read is taken as part of the Service Order completion. If supplied will result in the provision of energy data for this MIRN via a MeterDataNotification transaction.
DATEOFATTEMPTEDACCESS	O	O	Required for No Access response
JOBCOMPLETIONCODE1	O	O	Required if Service Order completed or attempted with No Access
JOBCOMPLETIONCODE2	O	O	Required if Service Order completed or attempted with No Access

Transaction:	ServiceOrderResponse
Received From:	Network Operator
Sent To:	User

Data Element	SA/WA Mandatory/ Optional / Not Required	Victoria Mandatory/ Optional/ Not Required	Usage
JOBCOMPLETIONCODE3	O	O	Required whenever a meter is removed as part of the Service Order completion Optional for other Service Order completions. Not used in WA.
NOTIFICATIONDATA/SPECIALNOTES/COMMENTLINE	O	O	Required if Service Order is attempted but not successfully completed, including when cancelled by the DB For the avoidance of doubt, not required for retailer initiated B2B cancellation transaction unless:.. Retailer Cancel SO was rejected by the DB but later cancelled in the field SO cancellation was verbally communicated by the Retailer. Up to 3 comment lines can be provided (80 characters each) Note: Participants will refer to this field as SORDNotCompleteComment/CommentLine
HeatingValue Zone	O	Not included	REQUIRED IN WA, NOT INCLUDED IN SA
TransmissionZone	O	Not included	REQUIRED IN WA, NOT INCLUDED IN SA
Distribution Tariff	O	Not included	REQUIRED IN WA, NOT INCLUDED IN SA
ACCESSDETAILS	O	Not included	NOT INCLUDED IN SA. INCLUDED IN WA FOR SO RESPONSES FOR SCR,CLT AND ECO. OPTIONAL FOR OTHER JOB ENQUIRY CODES.

Transaction:	ServiceOrderResponse
Received From:	Network Operator
Sent To:	User

Data Element	SA/WA Mandatory/ Optional / Not Required	Victoria Mandatory/ Optional/ Not Required	Usage
METERPOSITION	O	Not included	NOT INCLUDED IN SA. INCLUDED IN WA FOR SO RESPONSES FOR SCR,CLT,ECO AND MCH. OPTIONAL FOR OTHER JOB ENQUIRY CODES.
DOGCODE	O	Not included	NOT INCLUDED IN SA. INCLUDED IN WA FOR SO RESPONSES FOR SCR,CLT,ECO AND MCH. OPTIONAL FOR OTHER JOB ENQUIRY CODES.
EVENT	O	O	MAY BE REPEATED ANY NUMBER OF TIMES. THE EVENT ELEMENT WILL IDENTIFY ANY ERRORS OCCURRING IN THE PROCESSING OF THE REQUEST RECORD.

The transaction is implemented as the ServiceOrderResponse transaction in aseXML utilising the xsi:type="ase:GasServiceOrderType" construct for the ServiceOrderType element and xsi:type="ase:GasServiceOrderNotificationData" construct for the NotificationData element.

Dog Code should be included within the 'site data' element.

The ServiceOrderResponse transaction is in the following format:

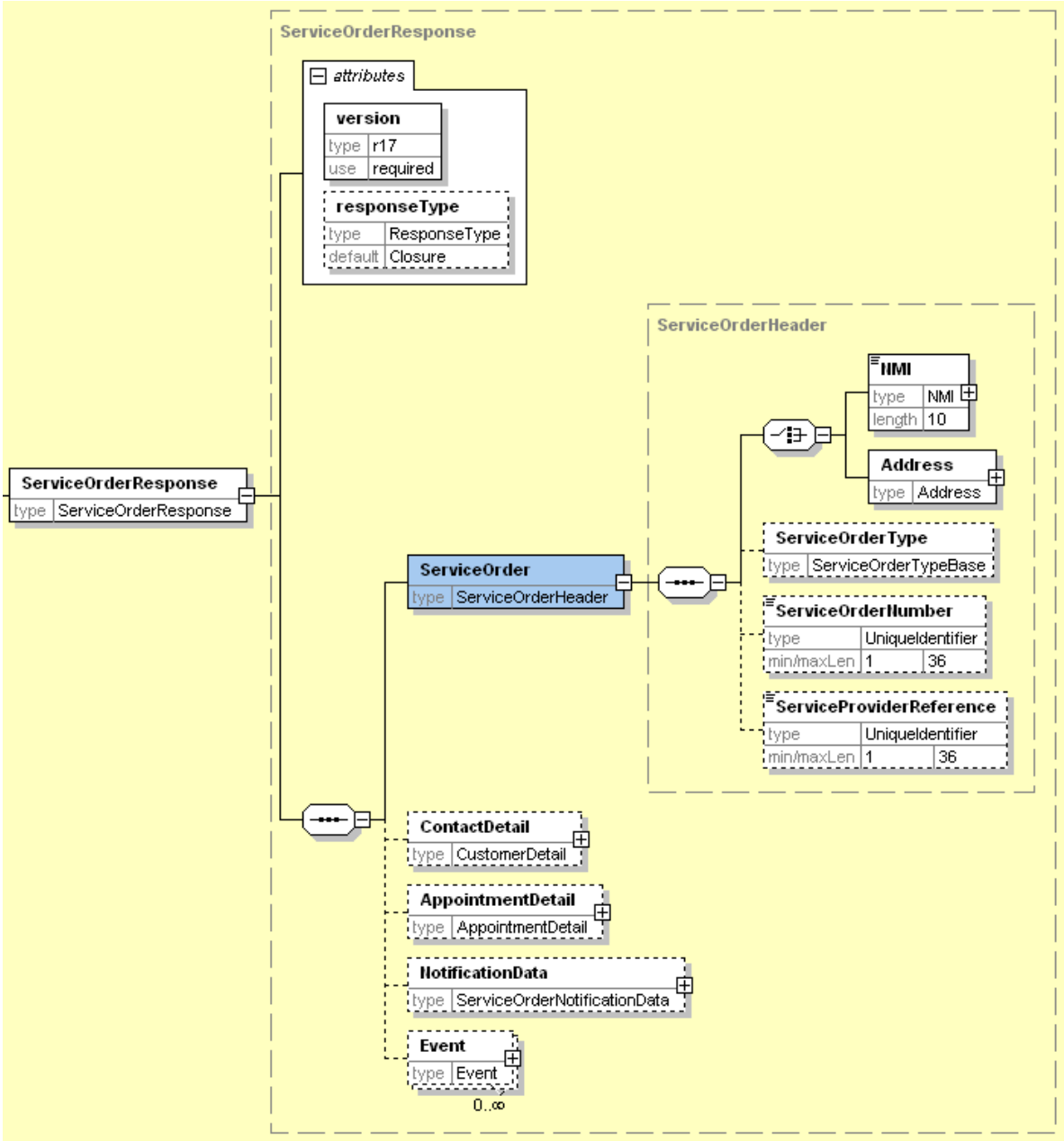

Figure 4-36 ServiceOrderResponse as XML schema

See section 4.2.3.4 for the format of the GasServiceOrderType type construct.

The GasServiceOrderNotificationData type construct is in the following format:

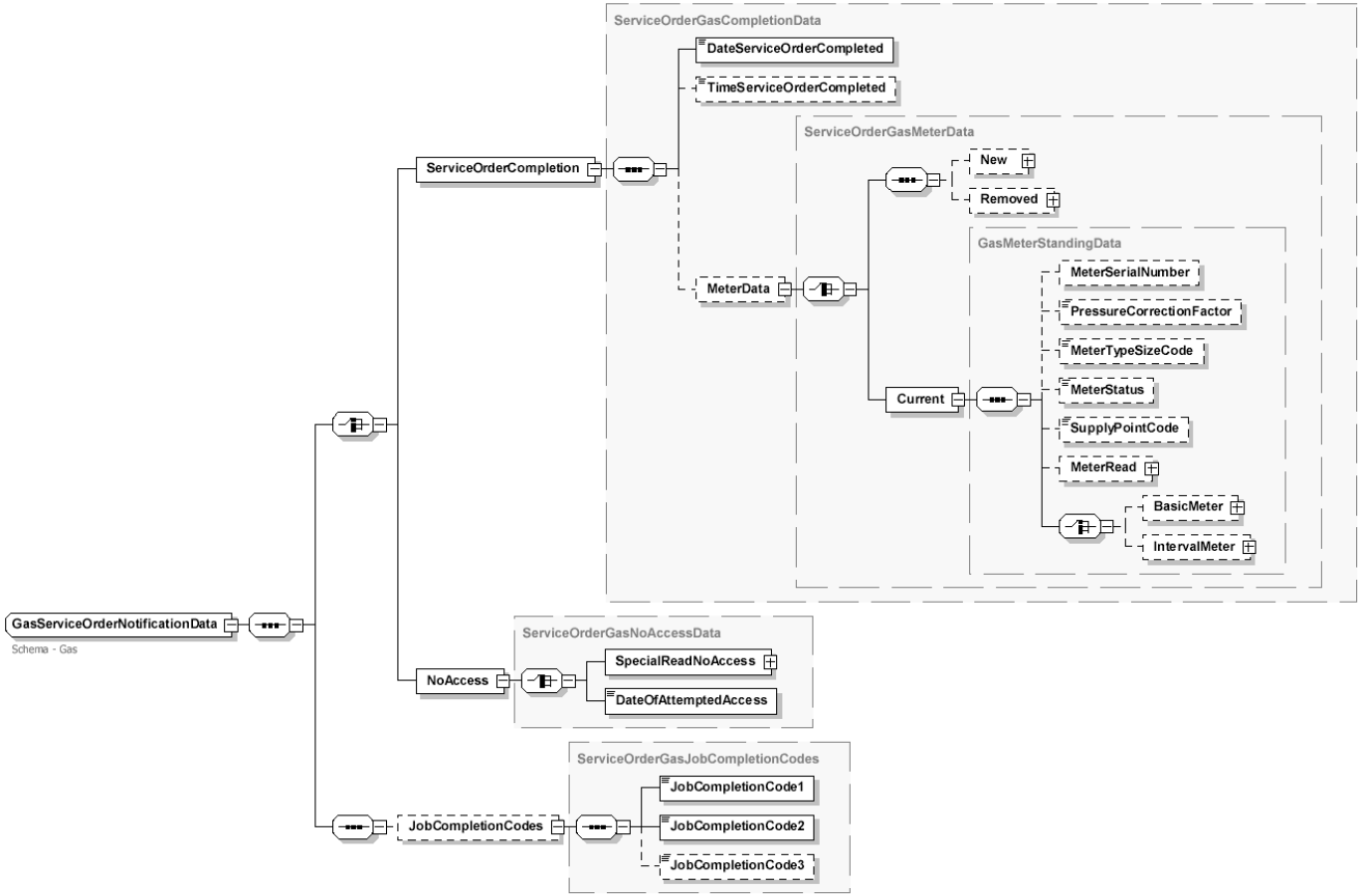

Figure 4-37 GasServiceOrderNotificationData type as eXML schema

The MeterData/New, MeterData/Removed and MeterData/Current elements are each in the following format:

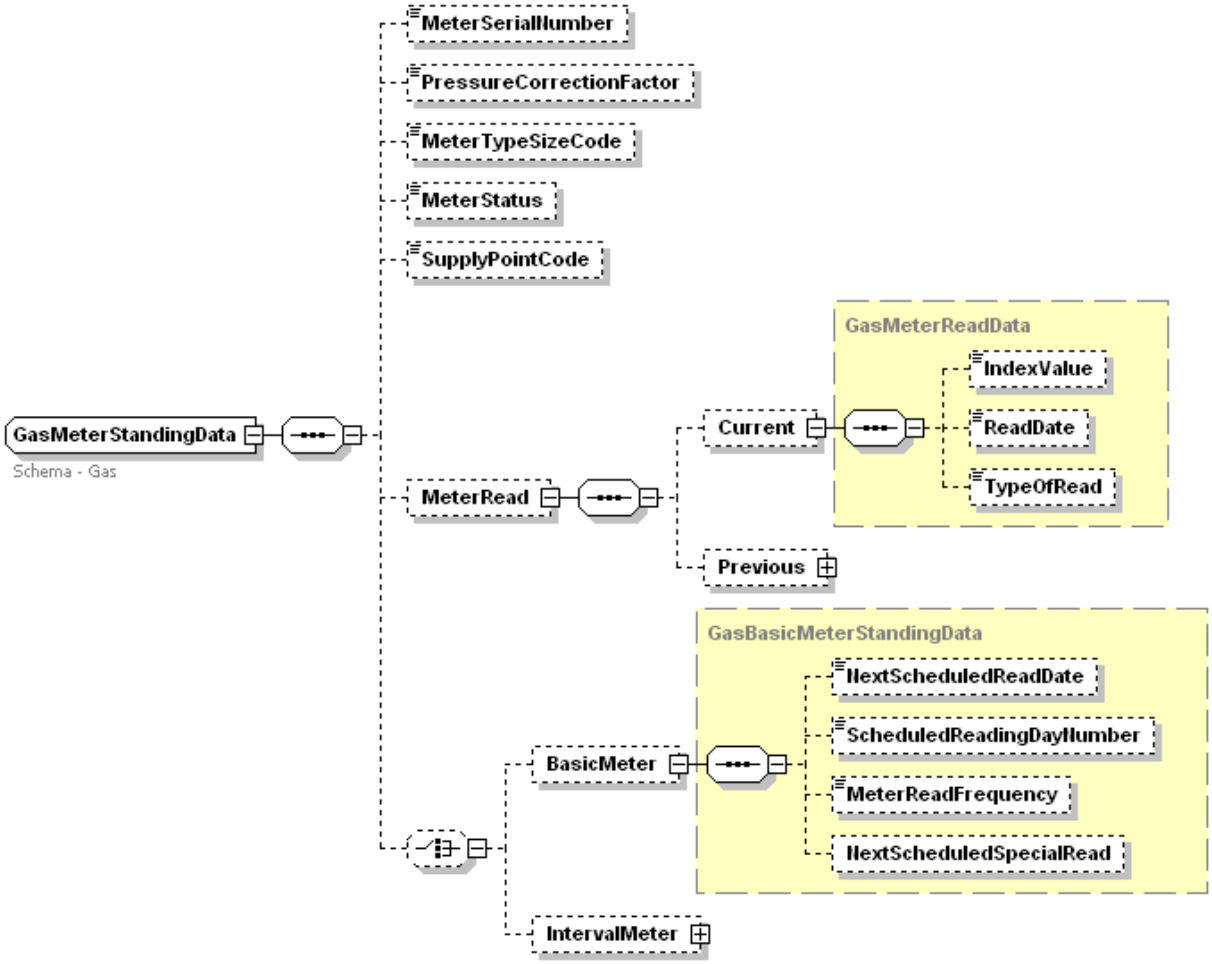

Figure 4-38 GasMeterStandingData as eXML schema

XML Sample

Initial Notification


```
<Header>
    <From description="Network Operator">XXXXXXXXXX</From>
    <To description="Retailer">XXXXXXXXXX</To>
    <MessageID>NETO-MSG-73645</MessageID>
    <MessageDate>2004-08-01T12:00:00+10:00</MessageDate>
    <TransactionGroup>SORD</TransactionGroup>
    <Market>SAGAS</Market>
</Header>
<Transactions>
    <Transaction transactionID="NETO-TXN-46735" transactionDate="2004-08-01T12:00:00+10:00"
initiatingTransactionID="RETO-TXN-463547">
        <ServiceOrderResponse version="r13" responseType="Initial">
            <ServiceOrder>
                <NMI checksum="3">2837465436</NMI>
                <ServiceOrderType xsi:type="ase:ServiceOrderTypeGas">
                    <JobEnquiryCode>MFX</JobEnquiryCode>
                </ServiceOrderType>
                <ServiceOrderNumber>TXR-756453</ServiceOrderNumber>
                <ServiceProviderReference>WR-7564537</ServiceProviderReference>
            </ServiceOrder>
        </ServiceOrderResponse>
    </Transaction>
</Transactions>
```


Completion Notification (SA Example)


```
<Header>
        <From description="">FBSTEST</From>
        <To description="">DEV</To>
        <MessageID>20120302181045584</MessageID>
        <MessageDate>2012-03-02T17:10:25+10:00</MessageDate>
        <TransactionGroup>SORD</TransactionGroup>
        <Priority>Low</Priority>
        <Market>SAGAS</Market>
</Header>
<Transactions>
        <Transaction transactionID="FBSTEST-20120302181025678" transactionDate="2012-03-
02T17:10:25+10:00" initiatingTransactionID="FBS-20120201181025678">
                <ServiceOrderResponse version="r17" responseType="Closure">
                        <ServiceOrder>
                                <NMI checksum="1">5510419959</NMI>
                                <ServiceOrderType xsi:type="ase:GasServiceOrderType" version="r13">
                                        <JobEnquiryCode>SCR</JobEnquiryCode>
                                </ServiceOrderType>
                                <ServiceOrderNumber>ABC9798977</ServiceOrderNumber>
                                <ServiceProviderReference>XY75667</ServiceProviderReference>
                        </ServiceOrder>
                        <AppointmentDetail>
                                <Preferred>
                                        <Date>2012-03-02</Date>
                                        <Time>17:10:25+10:00</Time>
                                </Preferred>
                        </AppointmentDetail>
                        <NotificationData xsi:type="ase:GasServiceOrderNotificationData" version="r13">


                                <ServiceOrderCompletion>
                                        <DateServiceOrderCompleted>2012-03-
02</DateServiceOrderCompleted>
                        <TimeServiceOrderCompleted>17:40:25+10:00</TimeServiceOrderCompleted>
                                        <MeterData>
                                                <New>
```

```
                                        <PressureCorrectionFactor>0.9</PressureCorrectionFactor>
                                                <MeterTypeSizeCode>BM7</MeterTypeSizeCode>
                                                <MeterStatus>Turned on</MeterStatus>

            <SupplyPointCode>Basic</SupplyPointCode>
                                                        <MeterRead>
                                                                <Current>
                                                                <IndexValue>3</IndexValue>
                                                                        <ReadDate>2012-03-
    02</ReadDate>
                                                                </Current>

                                                        </MeterRead>
                                                        <BasicMeter>
                                                                <NextScheduledReadDate>2012-
    03-02</NextScheduledReadDate>
                                        <ScheduledReadingDayNumber>34</ScheduledReadingDayNumber>
                                                                <MeterReadFrequency>Bi
    Monthly</MeterReadFrequency>
                                                        </BasicMeter>
                                                </New >
                                        </MeterData>
                                </ServiceOrderCompletion>
                                <JobCompletionCodes>
                                        <JobCompletionCode1>15</JobCompletionCode1>
                                        <JobCompletionCode2>78</JobCompletionCode2>
                                        <JobCompletionCode3>31</JobCompletionCode3>
                                </JobCompletionCodes>
                        </NotificationData>
                        <Event class="Message" severity="Information">
                                <Code>0</Code>
                        </Event>
                </ServiceOrderResponse>
            </Transaction>
    </Transactions>
```


Completion Notification – WA Example


```
<Header>
        <From description="Network Operator">XXXXXXXXXX</From>
        <To description="Retailer">XXXXXXXXXX</To>
        <MessageID>NETO-MSG-73645</MessageID>
        <MessageDate>2004-08-01T12:00:00+10:00</MessageDate>
        <TransactionGroup>SORD</TransactionGroup>
        <Market>WAGAS</Market>
    </Header>
    <Transactions>
        <Transaction transactionID="NETO-TXN-46735" transactionDate="2004-08-01T12:00:00+10:00"
initiatingTransactionID="RETO-TXN-463547">
            <ServiceOrderResponse version="r13" responseType="Closure">
                <ServiceOrder>
                    <NMI checksum="3">2837465436</NMI>
                    <ServiceOrderType xsi:type="ase:GasServiceOrderType" version="r13">
                        <JobEnquiryCode>MFX</JobEnquiryCode>
                    </ServiceOrderType>
                    <ServiceOrderNumber>TXR-756453</ServiceOrderNumber>
                    <ServiceProviderReference>WR-7564537</ServiceProviderReference>
                </ServiceOrder>
                <NotificationData xsi:type="ase:GasServiceOrderNotificationData" version="r13">
                    <NMIStandingData xsi:type="ase:GasStandingData" version="r13">
                        <MasterData>
                            <DistributionTariff>1A1R</DistributionTariff>
                            <TransmissionZone>03</TransmissionZone>
                            <HeatingValueZone>01</HeatingValueZone>
                        </MasterData>
                    </NMIStandingData>
```

```
                <ServiceOrderCompletion>
                    <DateServiceOrderCompleted>2004-08-01</DateServiceOrderCompleted>
                    <MeterData>
                        <New >
                            <MeterSerialNumber>M1234</MeterSerialNumber>
                            <PressureCorrectionFactor>0.9</PressureCorrectionFactor>
                            <MeterTypeSizeCode>BM1</MeterTypeSizeCode>
                            <MeterRead>
                                <Current>
                                    <IndexValue>0</IndexValue>
                                </Current>
                            </MeterRead>
                            <BasicMeter>
                                <NextScheduledReadDate>2004-03-01</NextScheduledReadDate>
                                <ScheduledReadingDayNumber>4</ScheduledReadingDayNumber>
                            </BasicMeter>
                        </New >
                    </MeterData>
                </ServiceOrderCompletion>
                <JobCompletionCodes>
                    <JobCompletionCode1>10</JobCompletionCode1>
                    <JobCompletionCode2>12</JobCompletionCode2>
                </JobCompletionCodes>
            </NotificationData>
        </ServiceOrderResponse>
    </Transaction>
</Transactions>
```

4.3. MIRN Discovery

4.3.1. Overview

The /Meter Installation Registration Number MIRN) is the term used to describe a unique gas metering point. The MIRN Discovery transaction group is used to return MIRN Standing Data information given the address of a MIRN, or the MIRN itself. The transaction is conducted between Users and Network Operators.

The following table shows the MIRN Discovery group of aseXML transactions and the corresponding transactions from the Table of Transactions.

aseXML Transaction	Table of Transactions	
Transaction Name	**Ref No**	**Transaction Type**
NMIDiscoveryRequest	280	Discovery Request (Address supplied)
NMIDiscoveryResponse	281	MIRN Standing Data
	284	MIRN Additional Data
	281*	Multiple MIRNs
NMIStandingDataRequest	280	Discovery Request (MIRN supplied)
NMIStandingDataResponse	281	MIRN Standing Data
	284	MIRN Additional Data

These business transactions will be mapped to the NMI Discovery (NMID) Transaction Group in aseXML. A NMI (National Metering Identifier) is Electricity terminology, for which the Gas equivalent is MIRN. As Gas and Electricity are harmonising their use of aseXML, the terms NMI and MIRN are used interchangeably in this document.

The transactions have been grouped into the following for definition:

- Provision of MIRN Data

These are defined below.

4.3.2. Provision of MIRN Data

MIRN data is transferred from a Network Operator to a User following a User's request. The type of request issued by a User is dependent upon whether they are requesting by MIRN, or by the address of the MIRN.

4.3.2.1. MIRN Discovery (Provision of MIRN Data from Address Search)

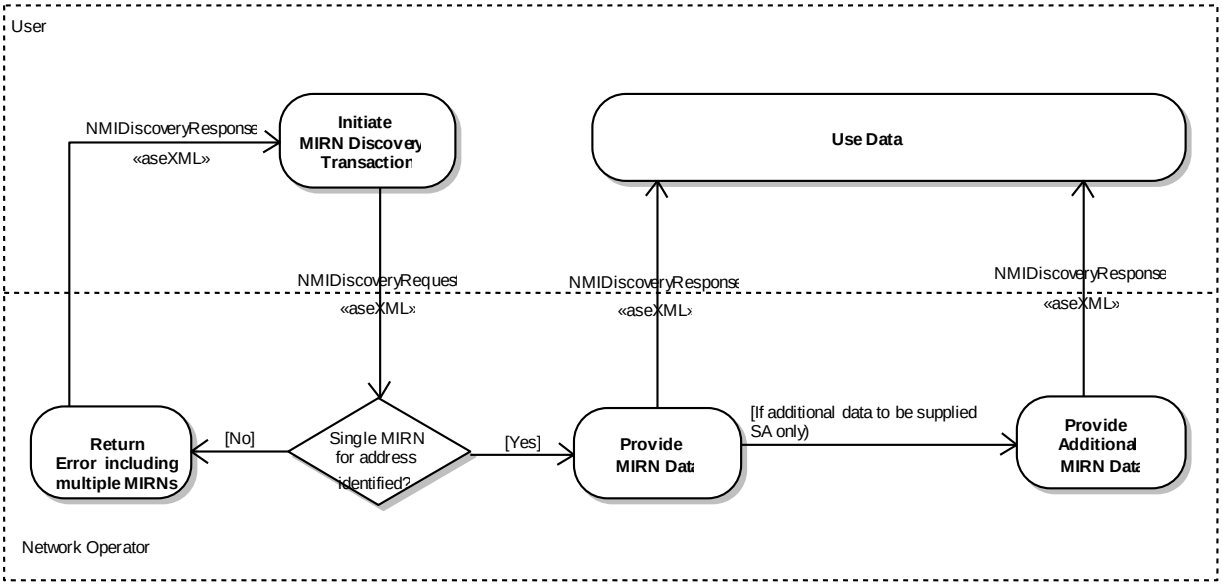

Figure 4-39 MIRN Discovery Activity Diagram

Process Sequence

A User issues a NMIDiscoveryRequest transaction when that User needs to determine the MIRN and obtain the MIRN Standing Data for a supplied address.

The diagram below shows the sequence of events for this transaction:

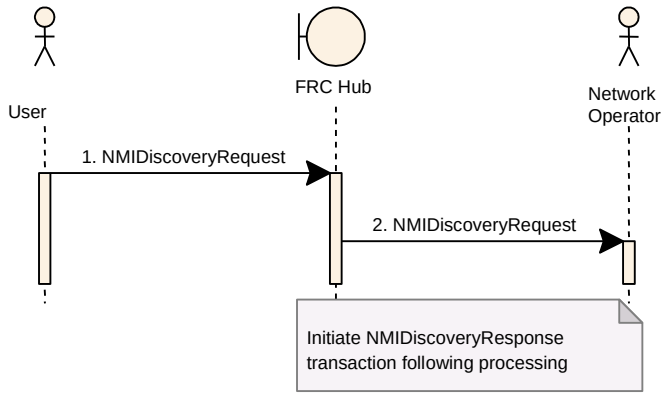

Figure 4-40 MIRN Discovery Request Sequence Diagram

ID	AseXML Transaction	From Object	To Object	Process Flow
1	NMIDiscoveryRequest	User	FRC Hub	MIRN 4B
2	NMIDiscoveryRequest	FRC Hub	Network Operator	

Matching addresses to MIRN

The Network Operator will attempt to obtain the MIRN Standing Data relevant to the supplied address.

If there is more than one commissioned or decommissioned MIRN for the discovery address in the MIRN database, the Network Operator must immediately provide a MIRN Discovery Response to the user containing each MIRN (but only up to a maximum 99 MIRNs) that has matched the discovery address.

If no address is found to match, an error is sent in the MIRN Discovery Response.

Additional Standing Data

In SA, if not all MIRN Standing Data is available regarding additional charges applicable to the MIRN within the required turnaround time for the transaction, two MIRN Discovery Responses will be issued, the initial response containing an indicator to the User that more data is to follow. The second response follows when the additional data becomes available. After a Network Operator has processed the request a NMIDiscoveryResponse transaction is returned to the User to provide the required data. A second NMIDiscoveryResponse transaction will be provided if additional MIRN data must be supplied. This does not apply in WA

The diagram below shows the sequence of events for this transaction:

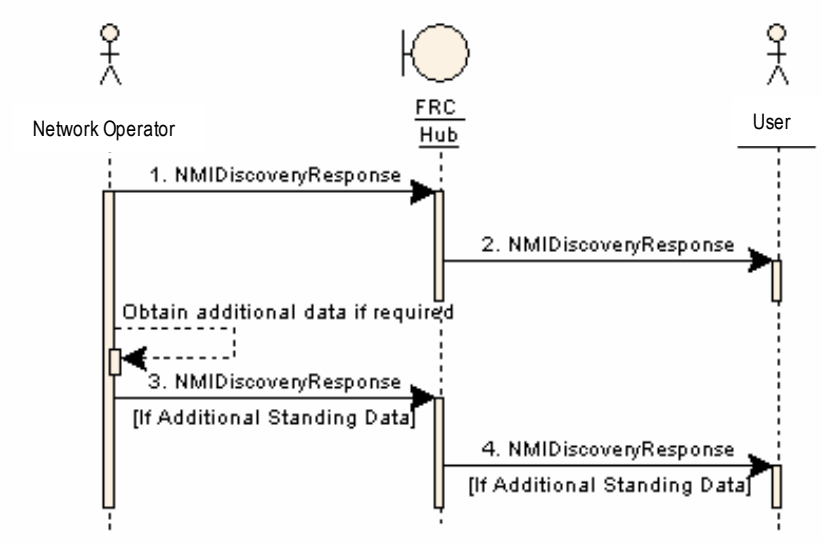

Figure 4-41 MIRN Discovery Response Sequence Diagram

ID	AseXML Transaction	From Object	To Object	Process Flow
1	NMIDiscoveryResponse	Network Operator	FRC Hub	MIRN 4B
2	NMIDiscoveryResponse	FRC Hub	User	
3	NMIDiscoveryResponse	Network Operator	FRC Hub	MIRN 4B
4	NMIDiscoveryResponse	FRC Hub	User	

The event record in the response transaction will indicate if an error was detected. The possible scenarios are:

- Successful – a single MIRN was found that matched the supplied address.
- Partially successful – more than one MIRN was found that matched the supplied address.
- Failure – no MIRN was found to match the supplied address, or there was an error retrieving the Standing Data for the MIRN.

4.3.2.2. NMIDiscoveryRequest

Transaction Definition Table cross-reference	This interface realises the following transactions from the Transaction Definition Table: • 280 – Discovery Request Note: This transaction is only used when an address is used as the input. The NMIStandingDataRequest transaction also realises this transaction when the input is a MIRN.
Trigger	This interface is triggered when a User requests MIRN Standing Data for a MIRN that they know only by address.
Pre-conditions	User has an Explicit Informed Consent from the subject customer in respect of the distribution supply point at the address.
Post-conditions	Network Operator has logged the Discovery Request
Transaction acknowledgment specific event codes	3606, 3608, 3638, 3639, 3660 (Also the generic event codes 3603, 3659, 3662, 3673 can be used)

The NMIDiscoveryRequest transaction is used by the User to request a MIRN and MIRN Standing Data from the Network Operator.

Transaction Data Elements

Transaction:	NMIDiscoveryRequest
Received From:	User
Sent To:	Network Operator

Data Element	VIC & SA/WA: Mandatory / Optional / Not Required	Usage
JURISDICTIONCODE	M	SA: LITERAL "SGI" WA LITERAL "WGI" VIC: LITERAL "VGI" NOT CURRENTLY USED BY THE GAS INDUSTRY. REQUIRED IN THIS TRANSACTION FOR CONVERGENCE WITH CURRENT ASEXML SCHEMA
ADDRESS	M	CONTAINS SEARCH DATA IN ASEXML "AUSTRALIANADDRESSSEARCH" STRUCTURED FORMAT.

The transaction is implemented as the existing NMIDiscoveryRequest transaction in aseXML. Due to harmonisation with Electricity aseXML, additional fields in the schema appear in the below diagram, however for Gas the only valid search field is Address. The transaction is in the following format:

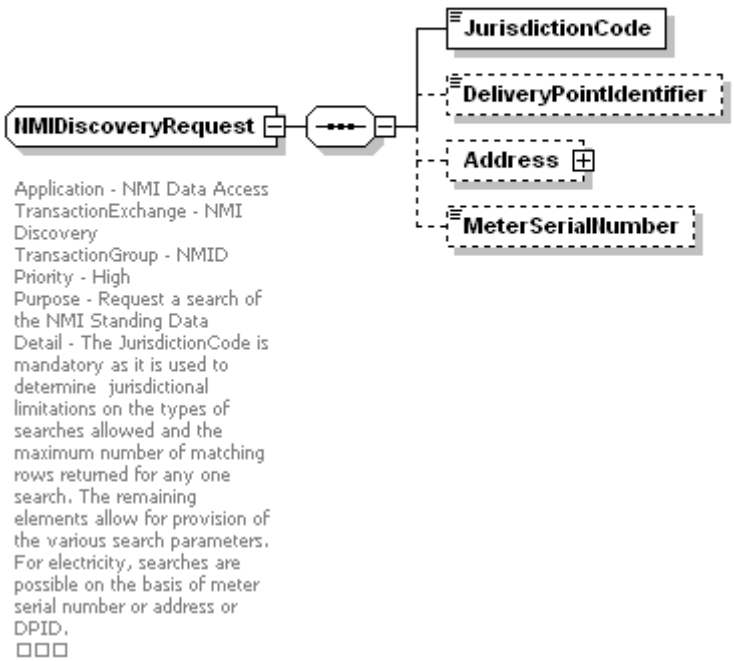

Figure 4-42 NMIDiscoveryRequest aseXML schema

XML Sample


```
<Header>
<From description="">FBSTEST</From>
<To description="">DEV</To>
<MessageID>20120302175139399</MessageID>
<MessageDate>2012-03-02T16:50:49+10:00</MessageDate>
<TransactionGroup>NMID</TransactionGroup>
<Priority>Medium</Priority>
<Market>SAGAS</Market>
</Header>
<Transactions>
<Transaction transactionID="FBSTEST-20120302175049898" transactionDate="2012-03-
02T16:50:49+10:00">
    <NMIDiscoveryRequest version="r17">
        <JurisdictionCode>SGI</JurisdictionCode>
        <Address>
            <StructuredAddress>
                <House>
                    <HouseNumber>52</HouseNumber>
                </House>
                <Street>
                    <StreetName>High</StreetName>
                    <StreetType>ST</StreetType>
                </Street>
            </StructuredAddress> <SuburbOrPlaceOrLocality>Brompton</SuburbOrPlaceOrLocality>
            <StateOrTerritory>SA</StateOrTerritory>
            <PostCode>5007</PostCode>
        </Address>
                    </NMIDiscoveryRequest>
</Transaction>
</Transactions>
```


4.3.2.3. NMIDiscoveryResponse (WA – sceham R13)

Transaction Definition Table cross-reference	This interface realises the following transactions from the GPTWG Transaction Definition Table: • 281 – MIRN Standing Data • 284 – MIRN Additional Data Note. The NMIStandingDataResponse transaction also realises these transactions when the request is a NMIStandingDataRequest transaction. Note: Transaction 281 will be used where the Network Operator identifies multiple MIRNs for an address.
Trigger	Completion of processing of the NMIDiscoveryRequest transaction.
Pre-conditions	None
Post-conditions	User has the MIRN Standing Data, or a record of failure of processing of the NMIDiscoveryRequest data and all errors detected.
Transaction acknowledgment specific event codes	3602, 3680 (Also the generic event codes 3603, 3659, 3662, 3673 can be used)

The NMIDiscoveryResponse transaction provides the MIRN Standing Data to the requestor or advises of the failure of the processing of the issued NMIDiscoveryRequest transaction. It also identifies whether any additional NMI Standing Data will be issued at a later time to the User in a subsequent NMIDiscoveryResponse.

Transaction Data Elements

Transaction:	NMIDiscoveryResponse
Received From:	Network Operator
Sent To:	User

Data Element	SA&WA: Mandatory / Optional / NOT REQUIRED	VIC: Mandatory / Optional / Not Required	Usage
NMI	M	M	
CHECKSUM	M	M	IMPLEMENTED AS AN ATTRIBUTE OF THE NMI ASEXML ELEMENT
DISTRIBUTIONTARIFF	O	O	Always Required if meter is attached for single MIRN responses. Not to be provided for multiple responses.
TRANSMISSIONZONE	O	M	Always required for single MIRN responses. Not to be provided for multiple responses.
HEATINGVALUEZONE	O	M	Always required for single MIRN responses. Not to be provided for multiple responses.
CUSTOMERCHARACTERISATION	O	O	Always Required if Basic Meter is attached in SA for single MIRN responses. Not to be provided for multiple responses. Never Required in WA

Transaction:	NMIDiscoveryResponse
Received From:	Network Operator
Sent To:	User

Data Element	SA&WA: NOT REQUIRED Mandatory / Optional /	VIC: Mandatory / Optional / Not Required	Usage
MIRNSTATUS	O	M	Always required for single MIRN responses. Not to be provided for multiple responses.
METERSERIALNUMBER	O	O	Required if meter is attached.
PRESSURECORRECTIONFACTOR	O	O	Always Required if basic meter is attached for single MIRN responses. Not to be provided for multiple responses.
METERSTATUS	O	M	If MeterStatus is set to "No Meter", then no meter is attached to the MIRN. Always required for single MIRN responses. Not to be provided for multiple responses. Not used in WA.
SUPPLYPOINTCODE	O	O	Always Required if meter is attached for single MIRN responses. Not to be provided for multiple responses.
CURRENT/READDATE	O	O	Always Required if Basic Meter is attached for single MIRN responses. Not to be provided for multiple responses.

Transaction:	NMIDiscoveryResponse
Received From:	Network Operator
Sent To:	User

Data Element	SA&WA: Mandatory / Optional / NOT REQUIRED	VIC: Mandatory / Optional / Not Required	Usage
NEXTSCHEDULEDREADDATE	O	O	Always Required if Basic Meter is attached for single MIRN responses. Not to be provided for multiple responses.
METERREADFREQUENCY	O	O	Always Required if Basic Meter is attached for single MIRN responses. Not to be provided for multiple responses.
NEXTSCHEDULEDSPECIALREAD/PREFERRED/DATE	O	O	Optional if Basic Meter is attached. Populated if there is a Special Read appointment booked against this MIRN. Not to be provided for multiple responses.
COMMUNICATIONEQUIPMENTPRESENT	O	O	Required if Interval Meter is attached. Not to be provided for multiple responses.

Transaction:	NMIDiscoveryResponse
Received From:	Network Operator
Sent To:	User

Data Element	SA&WA: Mandatory / Optional / NOT REQUIRED	VIC: Mandatory / Optional / Not Required	Usage
EXCLUDED SERVICE CHARGES/ CHARGE ITEM / CATEGORY	O	O	Only used for Interval meters. This information may be provided in a subsequent NMIDiscoveryResponse message if the AdditionalDataToFollow element is set to "true". Not to be provided for multiple responses. Not used in WA
EXCLUDED SERVICE CHARGES/ CHARGE ITEM / AMOUNT	O	O	Only used for Interval meters. This information may be provided in a subsequent NMIDiscoveryResponse message if the AdditionalDataToFollow element is set to "true". Not to be provided for multiple responses. Not used in WA
EXCLUDED SERVICE CHARGES/ CHARGE ITEM / EXPIRYDATE	O	O	Only used for Interval meters. This information may be provided in a subsequent NMIDiscoveryResponse message if the AdditionalDataToFollow element is set to "true". Not to be provided for multiple responses. Not used in WA
ADDRESS	M	M	In aseXML structured format

Transaction:	NMIDiscoveryResponse
Received From:	Network Operator
Sent To:	User

Data Element	SA&WA: Mandatory / Optional / NOT REQUIRED	VIC: Mandatory / Optional / Not Required	Usage
ADDITIONALDATAOFOLLOW	M	M	Only applies to SA. For multiple responses the value will always be 'false'. In WA value will always be "false"
EVENT	M	M	Set to '0' if no errors or events to report. May be repeated any number of times.
SCHEDULEDREADINGDAYNUMBER	O	Not Included	Required in WA if a basic meter is attached, not included in SA. Not to be provided for multiple responses.
METERTYPESIZECODE	O	Not Included	Required in WA. Not to be provided for multiple responses.

The transaction is implemented as the NMIDiscoveryResponse transaction in aseXML utilising the xsi:type="ase:GasStandingData" construct for the NMIStandingData element.

The NMIDiscoveryResponse transaction is in the following format:

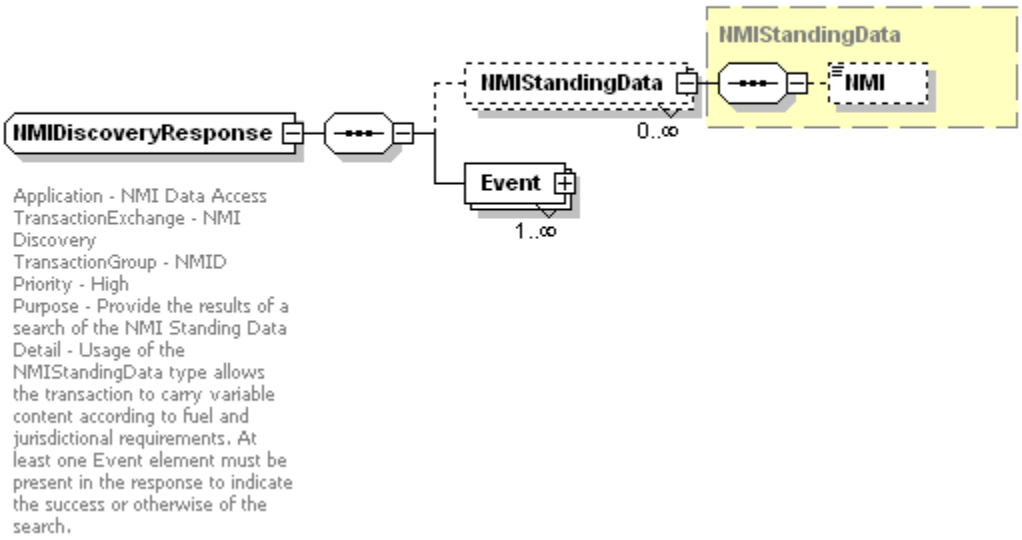

Figure 4-43 NMIDiscoveryResponse as XML schema

The GasStandingData type construct (high level) is in the following format:

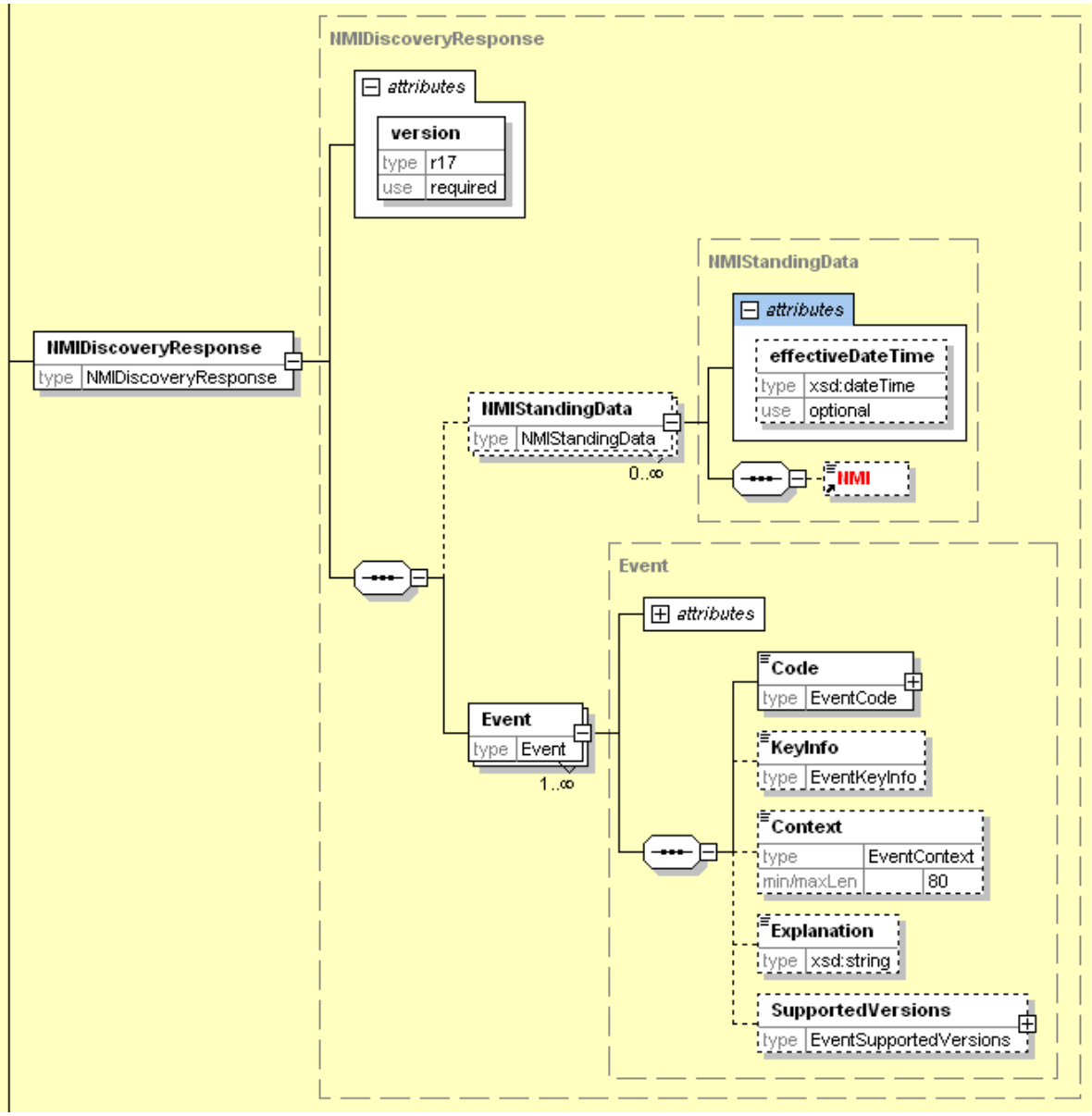

Figure 4-44 GasStandingData type (high level) aseXML schema

The MasterData element schema is defined below:

Figure 4-45 GasMasterStandingData as eXML schema

The GasMeterStandingData element schema is defined below:

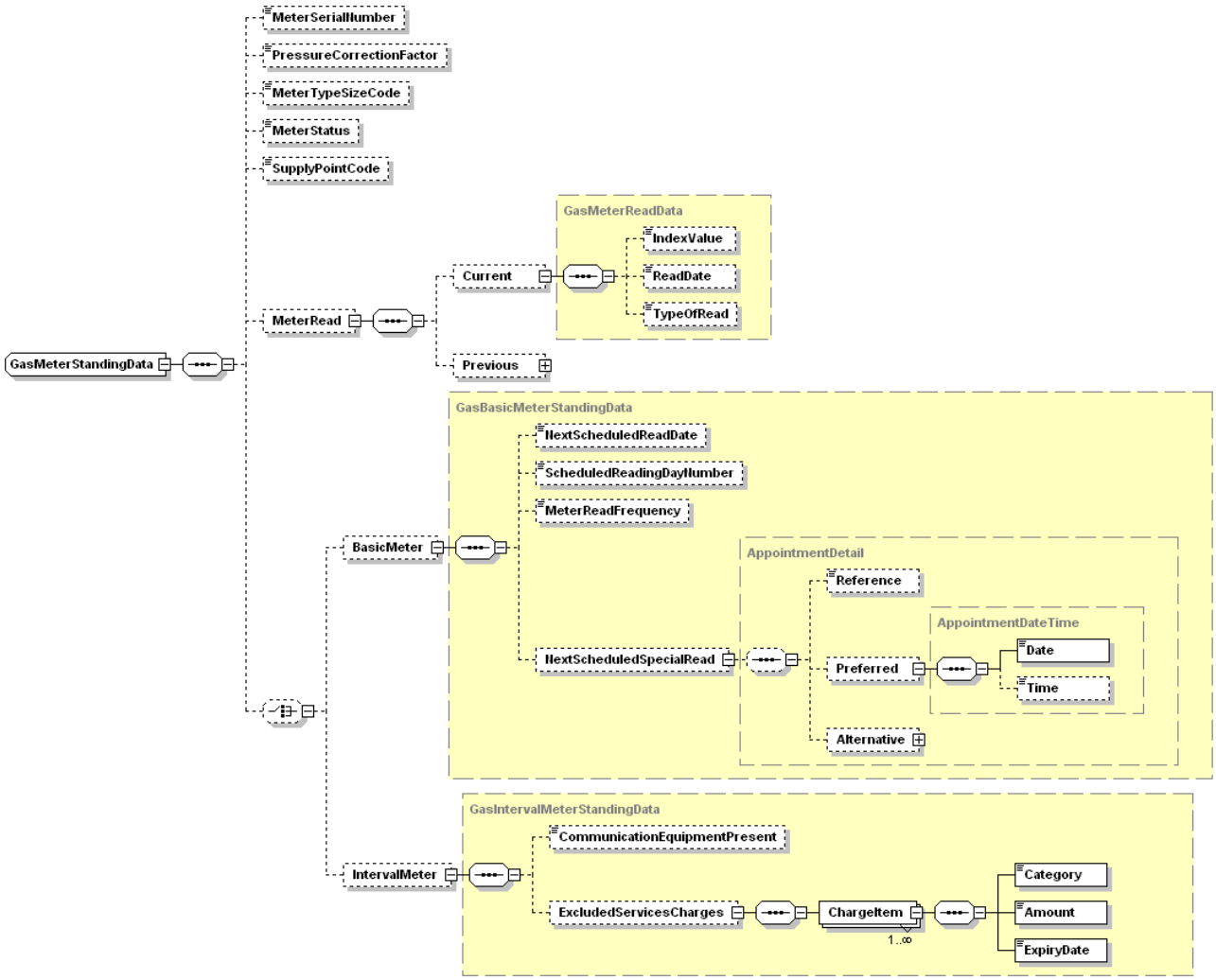

Figure 4-46 GasMeterStandingData as eXML schema

The SiteData element schema is defined below:

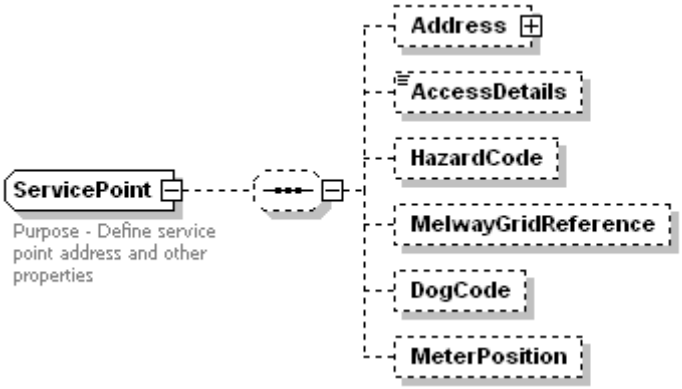

Figure 4-47 ServicePoint as eXML schema

XML Sample

Basic Meter Response


```
<Header>
    <From description="Network Operator">XXXXXXXXXX</From>
    <To description="Retailer">XXXXXXXXXX</To>
    <MessageID>NETO-MSG-4321</MessageID>
    <MessageDate>2004-08-14T12:00:00+10:00</MessageDate>
    <TransactionGroup>NMID</TransactionGroup>
    <Market>WAGAS</Market>
</Header>
<Transactions>
    <Transaction transactionID="NETO-TXN-4321" transactionDate="2004-08-14T12:00:00+10:00"
initiatingTransactionID="RETO-TXN-1234">
        <NMIDiscoveryResponse version="r4">
            <NMIStandingData xsi:type="ase:GasStandingData" version="r13">
                <NMI checksum="3">1234567890</NMI>
                <MasterData>
                    <DistributionTariff>1A1R</DistributionTariff>
                    <TransmissionZone>99</TransmissionZone>
                    <HeatingValueZone>03</HeatingValueZone>
                    <CustomerCharacterisation></CustomerCharacterisation>
                    <MIRNStatus>Commissioned</MIRNStatus>
                </MasterData>
                <MeterData>
                    <MeterSerialNumber>M1234</MeterSerialNumber>
                    <PressureCorrectionFactor>0.9</PressureCorrectionFactor>
                    <MeterTypeSizeCode>BM1</MeterTypeSizeCode>
                    <MeterStatus>Turned on</MeterStatus>
                    <SupplyPointCode>Basic</SupplyPointCode>
                    <MeterRead>
                        <Current>
                            <ReadDate>2004-08-01</ReadDate>
                        </Current>
                    </MeterRead>
                    <BasicMeter>
                        <NextScheduledReadDate>2004-08-01</NextScheduledReadDate>
                        <ScheduledReadingDayNumber>4</ScheduledReadingDayNumber>
                        <MeterReadFrequency>Bi Monthly</MeterReadFrequency>
                        <NextScheduledSpecialRead>
                            <Preferred>
                                <Date>2004-08-01</Date>
                            </Preferred>
                        </NextScheduledSpecialRead>
                    </BasicMeter>
                </MeterData>
                <SiteData>
                    <Address>
                        <AustralianAddress>
                            <StructuredAddress>
                                <House>
                                    <HouseNumber>25</HouseNumber>
                                </House>
                                <Street>
                                    <StreetName>Moray</StreetName>
                                    <StreetType>ST</StreetType>
                                </Street>
                            </StructuredAddress>
                            <SuburbOrPlaceOrLocality>Kew</SuburbOrPlaceOrLocality>
                            <StateOrTerritory>WA</StateOrTerritory>
                            <PostCode>6101</PostCode>
                        </AustralianAddress>
                    </Address>
                </SiteData>
                <AdditionalDataToFollow>false</AdditionalDataToFollow>
            </NMIStandingData>
```

```
                <Event>
                    <Code>0</Code>
                </Event>
            </NMIDiscoveryResponse>
        </Transaction>
    </Transactions>
```


Interval Meter Initial Response


```
    <Header>
        <From description="Network Operator">XXXXXXXXXX</From>
        <To description="Retailer">XXXXXXXXXX</To>
        <MessageID>NETO-MSG-4321</MessageID>
        <MessageDate>2004-08-14T12:00:00+10:00</MessageDate>
        <TransactionGroup>NMID</TransactionGroup>
        <Market>WAGAS</Market>
    </Header>
    <Transactions>
        <Transaction transactionID="NETO-TXN-4321" transactionDate="2004-08-14T12:00:00+10:00"
initiatingTransactionID="RETO-TXN-1234">
            <NMIDiscoveryResponse version="r4">
                <NMIStandingData xsi:type="ase:GasStandingData" version="r13">
                    <NMI checksum="3">1234567890</NMI>
                    <MasterData>
                        <DistributionTariff>1A1R</DistributionTariff>
                        <TransmissionZone>09</TransmissionZone>
                        <HeatingValueZone>03</HeatingValueZone>
                        <MIRNStatus>Commissioned</MIRNStatus>
                    </MasterData>
                    <MeterData>
                        <MeterSerialNumber>M1234</MeterSerialNumber>
                        <PressureCorrectionFactor>0.9</PressureCorrectionFactor>
                        <MeterTypeSizeCode>IM1</MeterTypeSizeCode>
                        <MeterStatus>Turned on</MeterStatus>
                        <SupplyPointCode>Interval</SupplyPointCode>
                        <IntervalMeter>
                            <CommunicationEquipmentPresent>true</CommunicationEquipmentPresent>
                            <MeterTypeSizeCode>IM1</MeterTypeSizeCode>
                        </IntervalMeter>
                    </MeterData>
                    <SiteData>
                        <Address>
                            <AustralianAddress>
                                <StructuredAddress>
                                    <House>
                                        <HouseNumber>25</HouseNumber>
                                    </House>
                                    <Street>
                                        <StreetName>Moray</StreetName>
                                        <StreetType>ST</StreetType>
                                    </Street>
                                </StructuredAddress>
                                <SuburbOrPlaceOrLocality>Kew</SuburbOrPlaceOrLocality>
                                <StateOrTerritory>WA</StateOrTerritory>
                                <PostCode>6101</PostCode>
                            </AustralianAddress>
                        </Address>
                    </SiteData>
                    <AdditionalDataToFollow>false</AdditionalDataToFollow>
                </NMIStandingData>
                <Event>
                    <Code>0</Code>
                </Event>
            </NMIDiscoveryResponse>
        </Transaction>
    </Transactions>
```

4.3.2.3A NMIDiscoveryResponse (SA – schema R29)

Transaction Definition Table cross-reference	This interface realises the following transactions from the Transaction Definition Table: • 281 – MIRN Standing Data • 284 – MIRN Additional Data Note. The NMIStandingDataResponse transaction also realises these transactions when the request is a NMIStandingDataRequest transaction. Note: Transaction 281 will be used where the Network Operator identifies multiple MIRNs for an address.
Trigger	Completion of processing of the NMIDiscoveryRequest transaction.
Pre-conditions	None
Post-conditions	User has the MIRN Standing Data, or a record of failure of processing of the NMIDiscoveryRequest data and all errors detected.
Transaction acknowledgment specific event codes	3602, 3680 (Also the generic event codes 3603, 3659, 3662, 3673 can be used)

The NMIDiscoveryResponse transaction provides the MIRN Standing Data to the requestor or advises of the failure of the processing of the issued NMIDiscoveryRequest transaction. It also identifies whether any additional NMI Standing Data will be issued at a later time to the User in a subsequent NMIDiscoveryResponse.

Transaction Data Elements

Transaction:	NMIDiscoveryResponse
Received From:	Network Operator
Sent To:	User

Data Element	SA&WA: Mandatory / Optional / NOT REQUIRED	VIC: Mandatory / Optional / Not Required	Usage
NMI	M	M	
CHECKSUM	M	M	IMPLEMENTED AS AN ATTRIBUTE OF THE NMI ASEXML ELEMENT
DISTRIBUTIONTARIFF	O	O	Always Required if meter is attached for single MIRN responses. Not to be provided for multiple responses.
TRANSMISSIONZONE	O	M	Always required for single MIRN responses. Not to be provided for multiple responses.
HEATINGVALUEZONE	O	M	Always required for single MIRN responses. Not to be provided for multiple responses.
CUSTOMERCHARACTERISATION	O	O	Always Required if Basic Meter is attached in SA for single MIRN responses. Not to be provided for multiple responses. Never Required in WA
CUSTOMERCLASSIFICATIONCODE	O	O	Mandatory in South Australia, Victoria and Queensland.

Transaction:	NMIDiscoveryResponse
Received From:	Network Operator
Sent To:	User

Data Element	SA&WA: Mandatory / Optional / NOT REQUIRED	VIC: Mandatory / Optional / Not Required	Usage
CONSUMPTIONTHRESHOLDCODE	O	O	Not required where CustomerClassificationCode is "RES".
MIRNSTATUS	O	M	Always required for single MIRN responses. Not to be provided for multiple responses.
METERSERIALNUMBER	O	O	Required if meter is attached.
PRESSURECORRECTIONFACTOR	O	O	Always Required if basic meter is attached for single MIRN responses. Not to be provided for multiple responses.
METERSTATUS	O	M	If MeterStatus is set to "No Meter", then no meter is attached to the MIRN. Always required for single MIRN responses. Not to be provided for multiple responses. Not used in WA.
SUPPLYPOINTCODE	O	O	Always Required if meter is attached for single MIRN responses. Not to be provided for multiple responses.

Transaction:	NMIDiscoveryResponse
Received From:	Network Operator
Sent To:	User

Data Element	SA&WA: Mandatory / Optional / NOT REQUIRED	VIC: Mandatory / Optional / Not Required	Usage
CURRENT/READ DATE	O	O	Always Required if Basic Meter is attached for single MIRN responses. Not to be provided for multiple responses.
NEXTSCHEDULED READ DATE	O	O	Always Required if Basic Meter is attached for single MIRN responses. Not to be provided for multiple responses.
METERREADFREQUENCY	O	O	Always Required if Basic Meter is attached for single MIRN responses. Not to be provided for multiple responses.
NEXTSCHEDULEDSPECIALREAD/PREFERRED/DATE	O	O	Optional if Basic Meter is attached. Populated if there is a Special Read appointment booked against this MIRN. Not to be provided for multiple responses.
COMMUNICATIONEQUIPMENTPRESENT	O	O	Required if Interval Meter is attached. Not to be provided for multiple responses.

Transaction:	NMIDiscoveryResponse
Received From:	Network Operator
Sent To:	User

Data Element	SA&WA: Mandatory / Optional / NOT REQUIRED	VIC: Mandatory / Optional / Not Required	Usage
EXCLUDED SERVICES CHARGES/ CHARGE ITEM / CATEGORY	O	O	Only used for Interval meters. This information may be provided in a subsequent NMIDiscoveryResponse message if the AdditionalDataToFollow element is set to "true". Not to be provided for multiple responses. Not used in WA
EXCLUDED SERVICES CHARGES/ CHARGE ITEM / AMOUNT	O	O	Only used for Interval meters. This information may be provided in a subsequent NMIDiscoveryResponse message if the AdditionalDataToFollow element is set to "true". Not to be provided for multiple responses. Not used in WA
EXCLUDED SERVICES CHARGES/ CHARGE ITEM / EXPIRYDATE	O	O	Only used for Interval meters. This information may be provided in a subsequent NMIDiscoveryResponse message if the AdditionalDataToFollow element is set to "true". Not to be provided for multiple responses. Not used in WA
ADDRESS	M	M	In aseXML structured format

Transaction:	NMIDiscoveryResponse
Received From:	Network Operator
Sent To:	User

Data Element	SA&WA: Mandatory / Optional / NOT REQUIRED	VIC: Mandatory / Optional / Not Required	Usage
ADDITIONALDATAOFOLLOW	M	M	Only applies to SA. For multiple responses the value will always be 'false'. In WA value will always be "false"
EVENT	M	M	Set to '0' if no errors or events to report. May be repeated any number of times.
SCHEDULEDREADINGDAYNUMBER	O	Not Included	Required in WA if a basic meter is attached, not included in SA. Not to be provided for multiple responses.
METERTYPESIZECODE	O	Not Included	Required in WA. Not to be provided for multiple responses.

The transaction is implemented as the NMIDiscoveryResponse transaction in aseXML utilising the xsi:type="ase:GasStandingData" construct for the NMIStandingData element.

The NMIDiscoveryResponse transaction is in the following format:

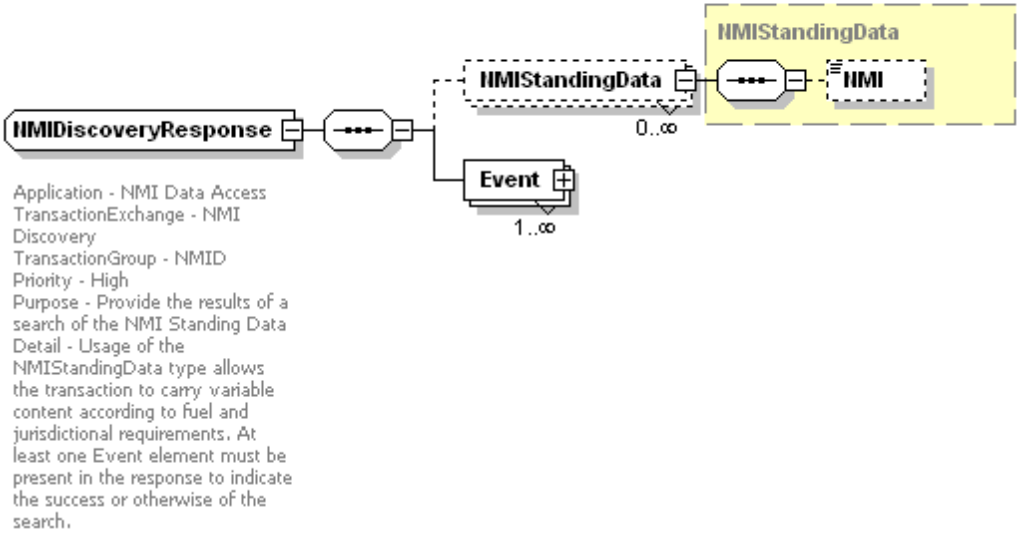

Figure 4-48 NMIDiscoveryResponse as eXML schema

The GasStandingData type construct (high level) is in the following format:

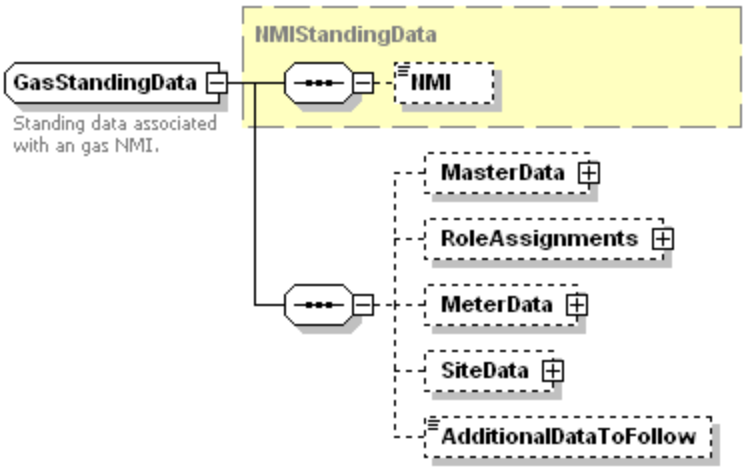

Figure 4-49 GasMasterStandingData type (high level) as eXML schema

The MasterData element schema is defined below:

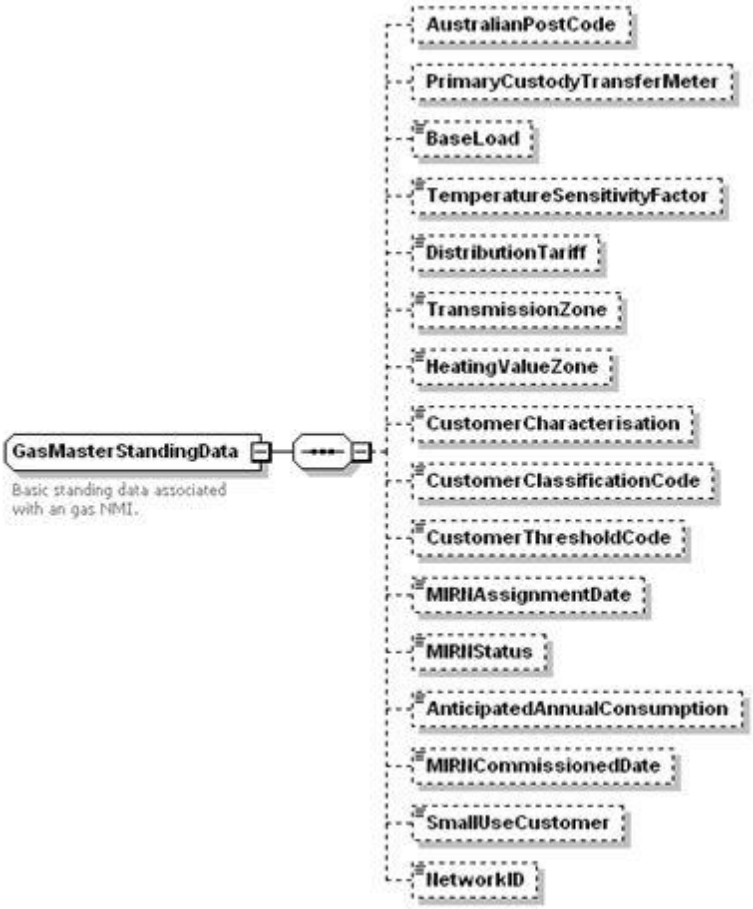

Figure 4-50 GasMeterStandingData as eXML schema

The GasMeterStandingData element schema is defined below:

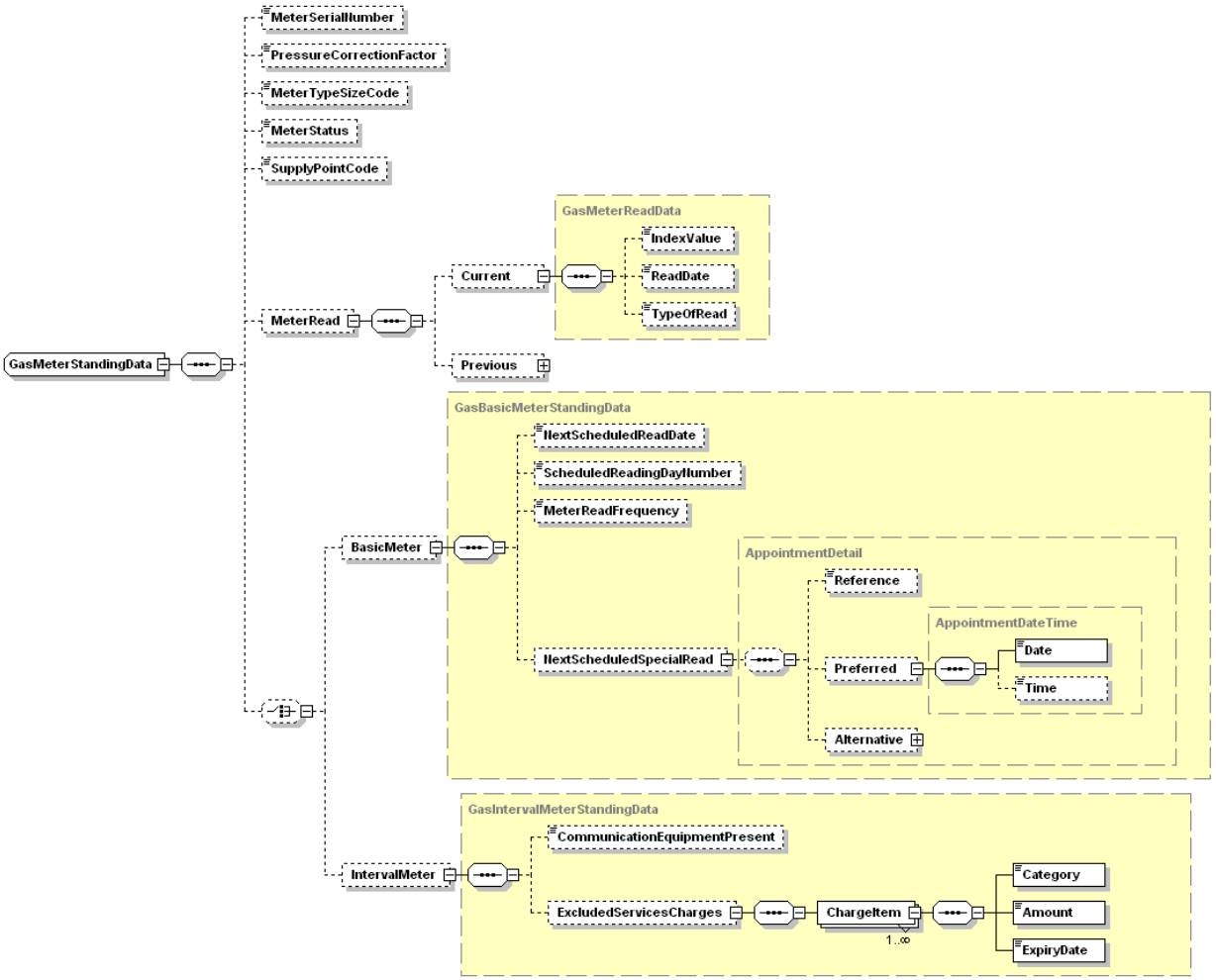

Figure 4-51 GasMasterStandingData as eXML schema

The SiteData element schema is defined below:

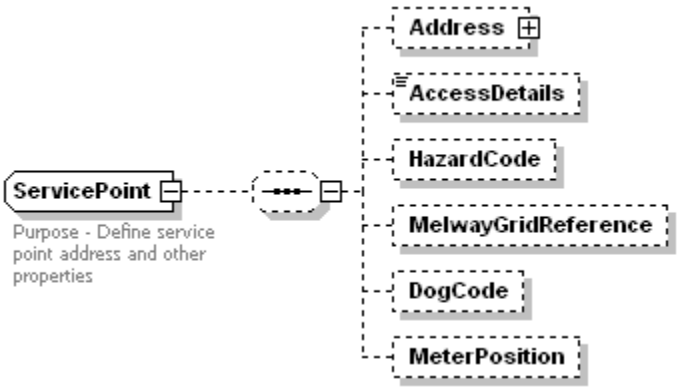

Figure 4-52 ServicePoint as eXML schema

XML Sample

Basic Meter Response


```
<Header>
    <From description="">FBSTEST</From>
    <To description="">DEV</To>
    <MessageID>20120302175415712</MessageID>
    <MessageDate>2012-03-02T16:52:50+10:00</MessageDate>
    <TransactionGroup>NMID</TransactionGroup>
    <Priority>Medium</Priority>
    <Market>SAGAS</Market>
</Header>
<Transactions>
    <Transaction transactionID="FBSTEST-20120302175250290" transactionDate="2012-03-
02T16:52:50+10:00" initiatingTransactionID="FBS-20120201175250290">
        <NMIDiscoveryResponse version="r17">
            <NMIStandingData xsi:type="ase:GasStandingData" version="r29">
                <NMI checksum="1">5510419959</NMI>
                <MasterData>

                    <DistributionTariff>Volume</DistributionTariff>
                    <TransmissionZone>03</TransmissionZone>
                    <HeatingValueZone>01</HeatingValueZone>
                    <CustomerCharacterisation>Metropolitan Residential</CustomerCharacterisation>
                    <CustomerClassificationCode>BUS</CustomerClassificationCode>
                    <CustomerThresholdCode>LOW</CustomerThresholdCode>
                    <MIRNAssignmentDate>2012-03-02</MIRNAssignmentDate>
                    <MIRNStatus>Commissioned</MIRNStatus>
                </MasterData>
                <MeterData>
                    <MeterSerialNumber>M1234</MeterSerialNumber>
                    <PressureCorrectionFactor>0.9</PressureCorrectionFactor>
                    <MeterTypeSizeCode>BM7</MeterTypeSizeCode>
                    <MeterStatus>Turned on</MeterStatus>
                    <SupplyPointCode>Basic</SupplyPointCode>
                    <MeterRead>
                        <Current>
                            <IndexValue>3</IndexValue>
                            <ReadDate>2012-03-02</ReadDate>
                            <TypeOfRead>Actual</TypeOfRead>
                        </Current>
                    </MeterRead>
                    <BasicMeter>
                        <NextScheduledReadDate>2012-03-02</NextScheduledReadDate>
                    <ScheduledReadingDayNumber>34</ScheduledReadingDayNumber>
                        <MeterReadFrequency>Bi Monthly</MeterReadFrequency>
                        <NextScheduledSpecialRead>

                            <ScheduledDate>2012-03-02</ScheduledDate>
                            <Preferred>
                                <Date>2012-03-02</Date>
                            </Preferred>
                        </NextScheduledSpecialRead>
                    </BasicMeter>
                </MeterData>
                <SiteData>
                    <Address>
                        <AustralianAddress>
                            <StructuredAddress>
                                <House>
                                    <HouseNumber>45</HouseNumber>
                                </House>
                                <Street>
                                    <StreetName>High</StreetName>
```

```
                                <StreetType>ST</StreetType>
                            </Street>
                        </StructuredAddress>
                    <SuburbOrPlaceOrLocality>Brompton</SuburbOrPlaceOrLocality>
                        <StateOrTerritory>SA</StateOrTerritory>
                        <PostCode>5007</PostCode>
                    </AustralianAddress>
                </Address>
            </SiteData>
            <AdditionalDataToFollow >false</AdditionalDataToFollow >
        </NMIStandingData>
        <Event class="Message" severity="Information">
            <Code>0</Code>
            <KeyInfo>This is the KeyInfo field; Use it for any freetext info, but the limit is 80 cha</KeyInfo>
                <Context>Context Bla</Context>
            <Explanation>All OK</Explanation>
        </Event>
    </NMIDiscoveryResponse>
  </Transaction>
</Transactions>
```

Interval Meter Initial Response


```
<Header>
        <From description="Network Operator">XXXXXXXXXX</From>
        <To description="Retailer">XXXXXXXXXX</To>
        <MessageID>NETO-MSG-4321</MessageID>
        <MessageDate>2004-08-14T12:00:00+10:00</MessageDate>
        <TransactionGroup>NMID</TransactionGroup>
        <Market>SAGAS</Market>
</Header>
<Transactions>
        <Transaction transactionID="NETO-TXN-4321" transactionDate="2004-08-14T12:00:00+10:00"
initiatingTransactionID="RETO-TXN-1234">
            <NMIDiscoveryResponse version="r4">
                <NMIStandingData xsi:type="ase:GasStandingData" version="r29">
                    <NMI checksum="3">1234567890</NMI>
                    <MasterData>
                        <DistributionTariff>1A1R</DistributionTariff>
                        <TransmissionZone>09</TransmissionZone>
                        <HeatingValueZone>03</HeatingValueZone>
                        <MIRNStatus>Commissioned</MIRNStatus>
                    </MasterData>
                    <MeterData>
                        <MeterSerialNumber>M1234</MeterSerialNumber>
                        <PressureCorrectionFactor>0.9</PressureCorrectionFactor>
                        <MeterTypeSizeCode>IM1</MeterTypeSizeCode>
                        <MeterStatus>Turned on</MeterStatus>
                        <SupplyPointCode>Interval</SupplyPointCode>
                        <IntervalMeter>
                            <CommunicationEquipmentPresent>true</CommunicationEquipmentPresent>
                            <MeterTypeSizeCode>IM1</MeterTypeSizeCode>
                        </IntervalMeter>
                    </MeterData>
                    <SiteData>
                        <Address>
                            <AustralianAddress>
                                <StructuredAddress>
                                    <House>
                                        <HouseNumber>25</HouseNumber>
                                    </House>
                                    <Street>
                                        <StreetName>Moray</StreetName>
                                        <StreetType>ST</StreetType>
                                    </Street>
                                </StructuredAddress>
                                <SuburbOrPlaceOrLocality>Kew</SuburbOrPlaceOrLocality>
                                <StateOrTerritory>WA</StateOrTerritory>
                                <PostCode>6101</PostCode>
                            </AustralianAddress>
                        </Address>
                    </SiteData>
                    <AdditionalDataToFollow>false</AdditionalDataToFollow>
                </NMIStandingData>
                <Event>
                    <Code>0</Code>
                </Event>
            </NMIDiscoveryResponse>
        </Transaction>
</Transactions>
```

Interval Meter Additional Data Response (SA only)


```
<Header>
        <From description="NO Netw orks">NETO</From>
        <To description="Retail Operator">RETO</To>
        <MessageID>NETO-MSG-4321</MessageID>
        <MessageDate>2004-08-14T12:00:00+10:00</MessageDate>
        <TransactionGroup>NMID</TransactionGroup>
        <Market>SAGAS</Market>
</Header>
<Transactions>
        <Transaction transactionID="NETO-TXN-4321" transactionDate="2004-08-14T12:00:00+10:00"
initiatingTransactionID="RETO-TXN-1234">
            <NMIDiscoveryResponse version="r4">
                <NMIStandingData xsi:type="ase:GasStandingData" version="r29">
                    <NMI checksum="3">1234567890</NMI>
                    <MasterData>
                        <DistributionTariff>Demand</DistributionTariff>
                        <TransmissionZone>09</TransmissionZone>
                        <HeatingValueZone>03</HeatingValueZone>
                        <MIRNStatus>Commissioned</MIRNStatus>
                    </MasterData>
                    <MeterData>
                        <MeterSerialNumber>M1234</MeterSerialNumber>
                        <PressureCorrectionFactor>0.9</PressureCorrectionFactor>
                        <MeterStatus>Turned on</MeterStatus>
                        <SupplyPointCode>Interval</SupplyPointCode>
                        <IntervalMeter>
                            <CommunicationEquipmentPresent>true</CommunicationEquipmentPresent>
                            <ExcludedServicesCharges>
                                <ChargeItem>
                                    <Category>Service</Category>
                                    <Amount>3.55</Amount>
                                    <ExpiryDate>2002-06-01</ExpiryDate>
                                </ChargeItem>
                            </ExcludedServicesCharges>
                        </IntervalMeter>
                    </MeterData>
                    <SiteData>
                        <Address>
                            <AustralianAddress>
                                <StructuredAddress>
                                    <House>
                                        <HouseNumber>25</HouseNumber>
                                    </House>
                                    <Street>
                                        <StreetName>Moray</StreetName>
                                        <StreetType>ST</StreetType>
                                    </Street>
                                </StructuredAddress>
                                <SuburbOrPlaceOrLocality>Kew </SuburbOrPlaceOrLocality>
                                <StateOrTerritory>SA</StateOrTerritory>
                                <PostCode>8101</PostCode>
                            </AustralianAddress>
                        </Address>
                    </SiteData>
                    <AdditionalDataToFollow >false</AdditionalDataToFollow >
                </NMIStandingData>
                <Event>
                    <Code>0</Code>
                </Event>
            </NMIDiscoveryResponse>
        </Transaction>
</Transactions>
```

4.3.2.4. MIRN Standing Data (Provision of MIRN Data from MIRN Search)

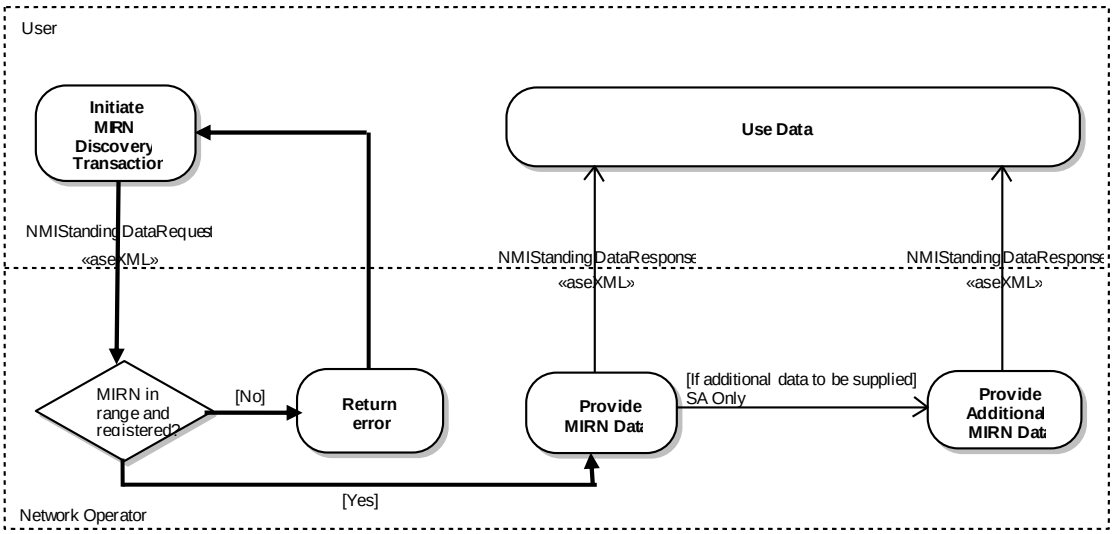

Figure 4-53 NMI Standing Data Activity Diagram

Process Sequence

A User issues a NMIStandingDataRequest when they have a known MIRN and wish to retrieve the standing data for it.

The diagram below shows the sequence of events for this transaction:

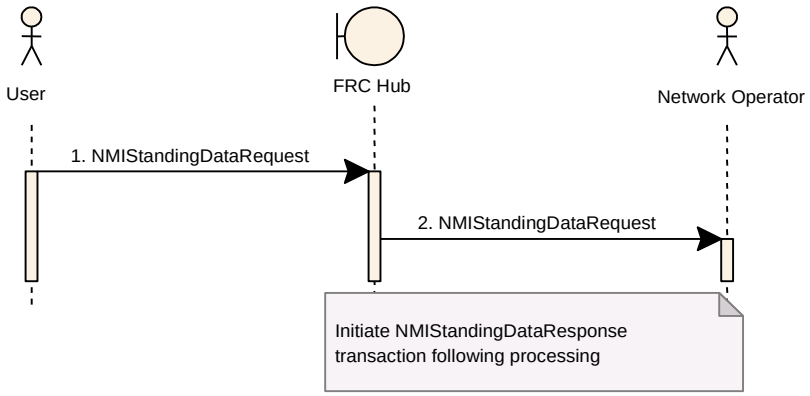

Figure 4-54 NMI Standing Data Request Sequence Diagram

ID	AseXML Transaction	From Object	To Object	Process Flow
1	NMIStandingDataRequest	User	FRC Hub	MIRN 4A
2	NMIStandingDataRequest	FRC Hub	NO/ Network Operator	

The Network Operator will attempt to obtain the MIRN Standing Data relevant to the supplied MIRN.

In SA, not all MIRN Standing Data may be available regarding additional charges applicable to the MIRN within the required turnaround time for the transaction. In this case, two MIRN Standing Data Responses will be issued, the initial response containing an indicator to the User that more data is to follow. The second response follows when the additional data becomes available.

After a Network Operator has processed the request a NMIStandingDataResponse transaction is returned to the User to provide the required data. A second NMIStandingDataResponse transaction will be provided if additional MIRN data must be supplied. This does not apply in WA

The diagram below shows the sequence of events for this transaction:

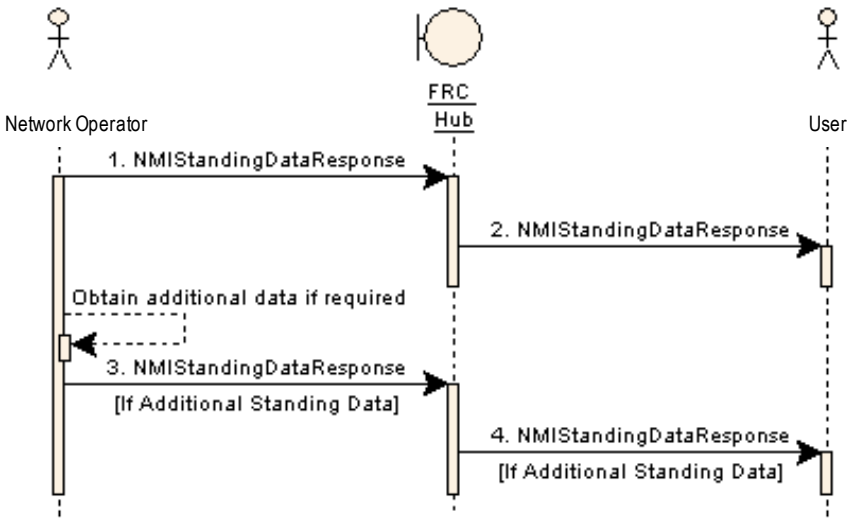

Figure 4-55 NMI Standing Data Response Sequence Diagram

ID	AseXML Transaction	From Object	To Object	Process Flow
1	NMIStandingDataResponse	Network Operator	FRC Hub	MIRN 4A
2	NMIStandingDataResponse	FRC Hub	User	
3	NMIStandingDataResponse	Network Operator	FRC Hub	MIRN 4A
4	NMIStandingDataResponse	FRC Hub	User	

The event record in the response transaction will indicate if an error was detected. The possible scenarios are:

- Successful – the MIRN was matched and Standing Data retrieved
- Failure – no MIRN was found, or there was an error retrieving the Standing Data for the MIRN.

4.3.2.5. NMIStandingDataRequest

Transaction Definition Table cross-reference	This interface realises the following transactions from the GPTWG Transaction Definition Table: • 280 – Discovery Request Note: This transaction is only used when a MIRN is used as the input. The NMIDiscoveryRequest transaction also realises this transaction when the input is an address.
Trigger	This interface is triggered when a User requests MIRN Standing Data for a known MIRN.
Pre-conditions	User has Explicit Informed Consent from the subject customer in respect of the distribution supply point referenced by the MIRN.
Post-conditions	Network Operator has logged the Standing Data Request
Transaction acknowledgment specific event codes	3638, 3660 (Also the generic event codes 3603, 3659, 3662, 3673 can be used)

The NMIStandingDataRequest transaction is used by the User to request MIRN Standing Data from a Network Operator.

Transaction Data Elements

Transaction:	NMIStandingDataRequest
Received From:	User
Sent To:	Network Operator

Data Element	Victoria & SA/WA Mandatory / Optional / Not Required	Usage
NMI	M	
CHECKSUM	M	IMPLEMENTED AS AN ATTRIBUTE OF THE NMI ASEXML ELEMENT

The transaction is implemented as the NMIStandingDataRequest transaction in aseXML. The transaction is in the following format:

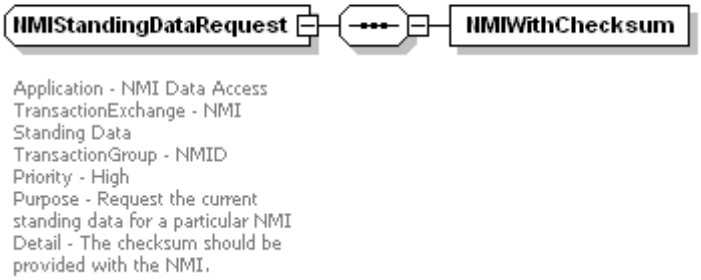

Figure 4-56 NMIStandingDataRequest as eXML schema

XML Sample

```
<Header>
        <From description="">FBSTEST</From>
        <To description="">DEV</To>
        <MessageID>20120302184817151</MessageID>
        <MessageDate>2012-03-02T17:48:09+10:00</MessageDate>
        <TransactionGroup>NMID</TransactionGroup>
        <Priority>Medium</Priority>
        <Market>SAGAS</Market>
</Header>
<Transactions>
        <Transaction transactionID="FBSTEST-20120302184809901" transactionDate="2012-03-
02T17:48:09+10:00">
            <NMIStandingDataRequest  version="r4">
                <NMI  checksum="1">5510419959</NMI>
            </NMIStandingDataRequest>
        </Transaction>
</Transactions>
```

4.3.2.6. NMIStandingDataResponse

Transaction Definition Table cross-reference	This interface realises the following transactions from the GPTWG Transaction Definition Table: • 281 – MIRN Standing Data • 284 – MIRN Additional Data Note. The NMIDiscoveryResponse transaction also realises these transactions when the request is a NMIDiscoveryRequest transaction.
Trigger	Completion of processing of the NMIStandingDataRequest transaction.
Pre-conditions	None
Post-conditions	User has the MIRN Standing Data, or a record of failure of processing of the NMIStandingDataRequest data and all errors detected.

Transaction acknowledgment specific event codes	3602 (Also the generic event codes 3603, 3659, 3662, 3673 can be used)

The NMIStandingDataResponse transaction provides the MIRN Standing Data to the requestor or advises of the failure of the processing of the issued NMIStandingDataRequest transaction. It also identifies whether any additional NMI Standing Data will be issued at a later time to the User in a subsequent NMIStandingDataResponse.

Transaction Data Elements

Transaction:	NMIStandingDataResponse
Received From:	Network Operator
Sent To:	User

Data Element	SA&WA: Mandatory / Optional / NOT REQUIRED	VIC: Mandatory / Optional / Not Required	Usage
NMI	M	M	
CHECKSUM	M	M	IMPLEMENTED AS AN ATTRIBUTE OF THE NMI ASEXML ELEMENT
DISTRIBUTIONTARIFF	O	O	Required if meter is attached
TRANSMISSIONZONE	M	M	
HEATINGVALUEZONE	M	M	
CUSTOMERCHARACTERISATION	O	O	Required in SA if Basic Meter is attached. Not Required in WA

Transaction:	NMIStandingDataResponse
Received From:	Network Operator
Sent To:	User

Data Element	SA&WA: Mandatory / Optional / NOT REQUIRED	VIC: Mandatory / Optional / Not Required	Usage
CUSTOMERCLASSIFICATIONCODE	O	O	Mandatory in South Australia, Victoria and Queensland.
CUSTOMERTHRESHOLDCODE	O	O	Not required where CustomerClassificationCode is "RES".
MIRNSTATUS	M	M	If "Commissioned" indicates that a meter is attached. If so meter data is to be provided.
METERSERIALNUMBER	O	O	Required if meter is attached
PRESSURECORRECTIONFACTOR	O	O	Required if meter is attached
METERSTATUS	O	O	Required if meter is attached
SUPPLYPOINTCODE	O	O	Required if meter is attached
CURRENT/READDATE	O	O	Required if Basic Meter is attached.

Transaction:	NMIStandingDataResponse
Received From:	Network Operator
Sent To:	User

Data Element	SA&WA: Mandatory / Optional / NOT REQUIRED	VIC: Mandatory / Optional / Not Required	Usage
NEXTSCHEDULEDREADDATE	O	O	Required if Basic Meter is attached.
METERREADFREQUENCY	O	O	Required if Basic Meter is attached.
NEXTSCHEDULEDSPECIALREAD/PREFERRED/DATE	O	O	Optional if Basic Meter is attached. Populated if there is a Special Read appointment booked against this MIRN.
COMMUNICATIONEQUIPMENTPRESENT	O	O	Required if Interval Meter is attached.
EXCLUDEDSERVICESCHARGES/CHARGEITEM/CATEGORY	O	O	Only used for Interval meters. This information may be provided in a subsequent NMIDiscoveryResponse message if the AdditionalDataToFollow element is set to "true". Not used in WA

Transaction:	NMIStandingDataResponse
Received From:	Network Operator
Sent To:	User

Data Element	SA&WA: Mandatory / Optional / NOT REQUIRED	VIC: Mandatory / Optional / Not Required	Usage
EXCLUDEDSERVICESCHARGES/CHARGEITEM/AMOUNT	O	O	Only used for Interval meters. This information may be provided in a subsequent NMIDiscoveryResponse message if the AdditionalDataToFollow element is set to "true". Not used in WA
EXCLUDEDSERVICESCHARGES/CHARGEITEM/EXPIRYDATE	O	O	Only used for Interval meters. This information may be provided in a subsequent NMIDiscoveryResponse message if the AdditionalDataToFollow element is set to "true". Not used in WA
ADDRESS	M	M	
ADDITIONALDATATOFOLLOW	M	M	Will always be "false" for WA. May be "true" or "false" for SA.
EVENT	M	M	Set to '0' if no errors or events to report. May be repeated any number of times.
SCHEDULEDREADINGDAYNUMBER	O	Not Included	Required in WA (if a basic meter is attached), not included in SA

Transaction:	NMIStandingDataResponse
Received From:	Network Operator
Sent To:	User

Data Element	SA&WA: Mandatory / Optional / NOT REQUIRED	VIC: Mandatory / Optional / Not Required	Usage
METERTYPESIZECODE	O	Not Included	Required in WA, not included in SA

The transaction is implemented as the NMIStandingDataResponse transaction in aseXML utilising the xsi:type="ase:GasStandingData" construct for the NMIStandingData element.

The NMIStandingDataResponse transaction is in the following format:

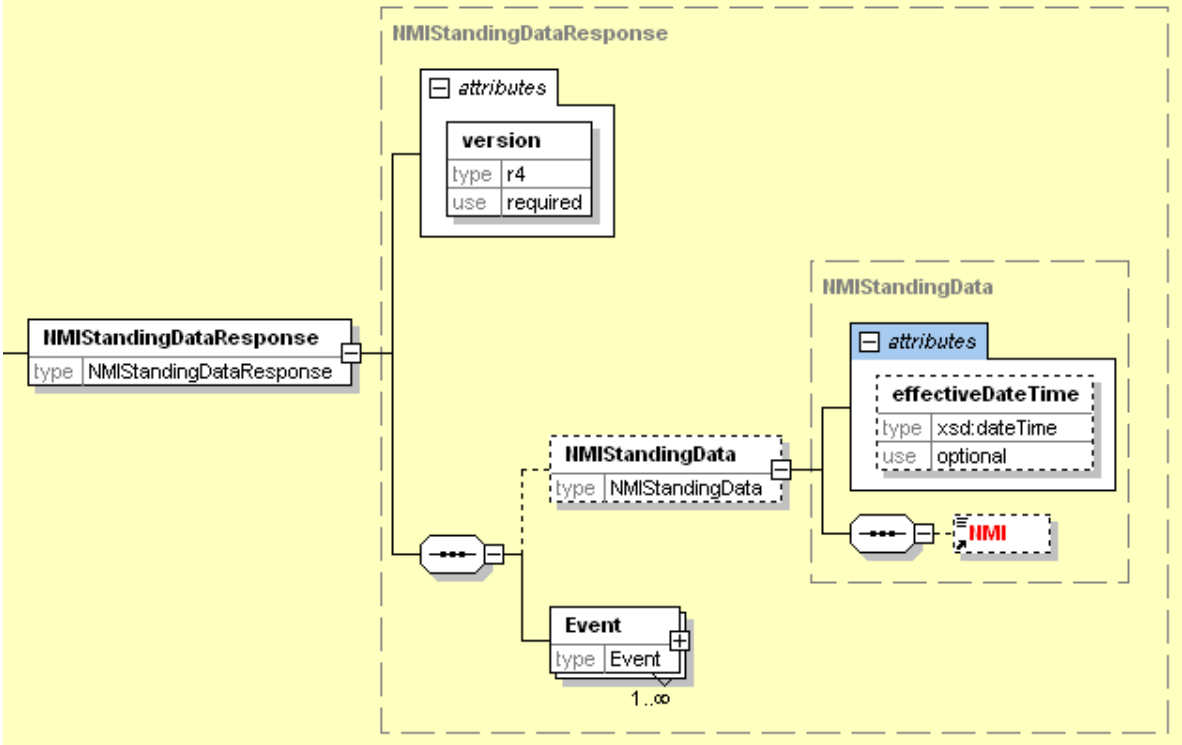

Figure 4-57 NMIStandingDataResponse as XML schema

See above section on MIRN Discovery for the format of the GasStandingData type construct

XML Sample

The XML data for a NMIStandingDataResponse is the same as the data for a NMIDiscoveryResponse with the exception of the transaction name. See above section on MIRN Discovery for an example of NMIDiscoveryResponse XML data.

4.4. Route and Site Information

4.4.1. Overview

Route and Site Information transactions are initiated by both Users and Network Operators to maintain alignment of data relating to Customer Sites and the Meter Reading Schedule.

The following table shows the Route and Site Information group of aseXML transactions and the corresponding transactions from the Table of Transactions.

aseXML Transaction	Table of Transactions	
Transaction Name	**Ref No**	**Transaction Type**
AmendMeterRouteDetails	66	Meter Site Access Information Change from User
	67	Meter Site Access Information Change from Network Operator
	68	Supply Point Information
	69	Address Information Change from Network Operator
	75	Meter Reading Route Change

These business transactions will be mapped to the new "SITE" Transaction Group in aseXML.

The transactions have been grouped into the following for definition:

- Site Access Information
- Site Address Information
- Route Change

4.4.2. Site Access Information

Site access information is that information that assists meter readers in the reading process. Changes to this information may come from the customer (via the User), the User itself, the meter reading personnel (via the Network Operator) or the Network Operator itself.

The activity diagram below shows a high level view of this process.

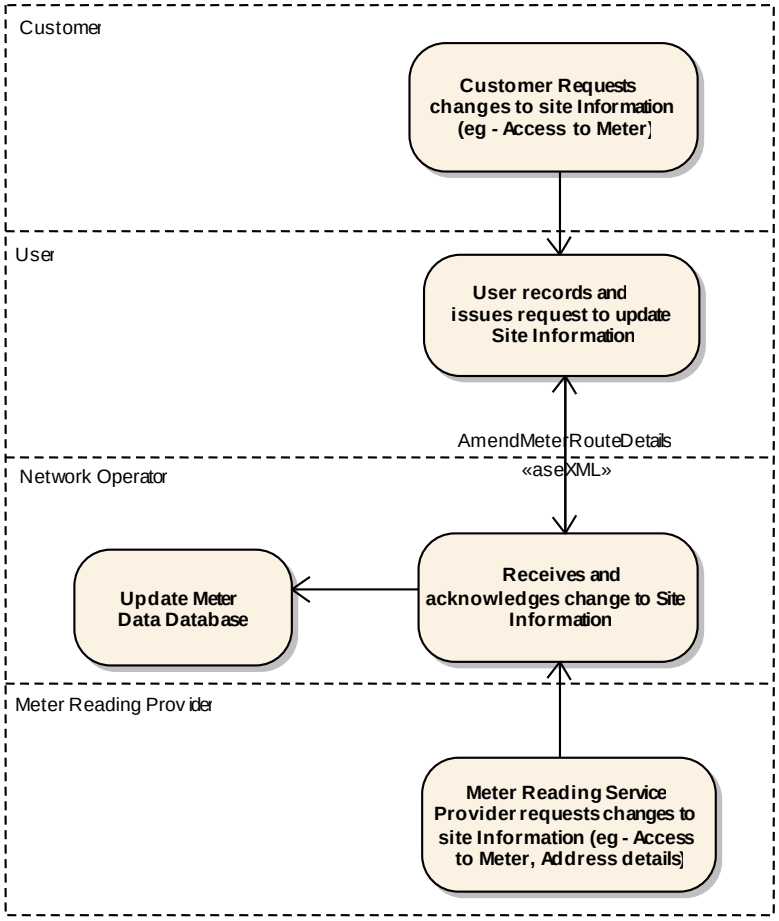

Figure 4-58 Update Site Access Information Activity Diagram

Process Sequence

Either a Network Operator or a User may become aware of a change to the site data that is maintained by both participants. When either of the participants makes an update to this data an AmendMeterRouteDetails transaction containing an AmendSiteAccessDetails element is generated and forwarded to the other applicable participant.

The diagram below shows the sequence of events for this transaction:

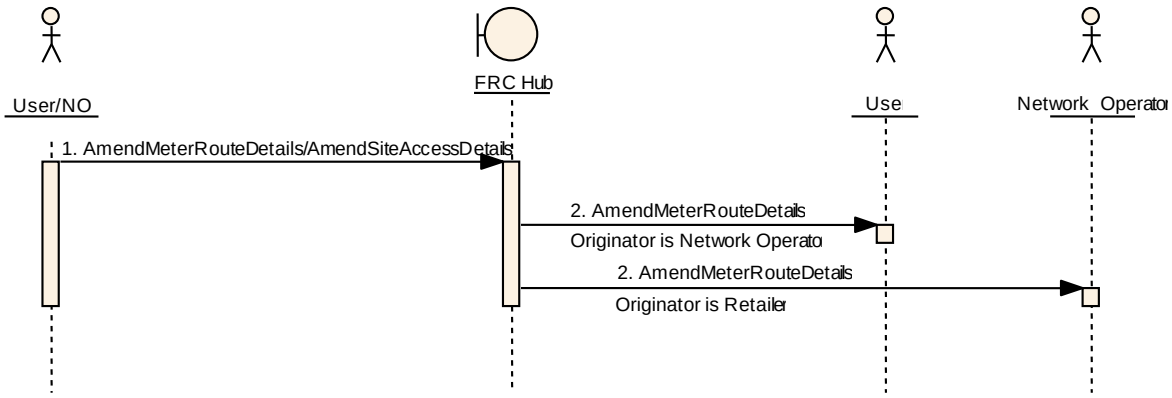

Figure 4-59 Update Site Access Information Sequence Diagram

ID	aseXML Transaction	From Object	To Object	Process Flow
1	AmendMeterRouteDetails/ AmendSiteAccessDetails	User or Network Operator	FRC Hub	DB1 & MR7
2	AmendMeterRouteDetails/ AmendSiteAccessDetails	FRC Hub	Network Operator or User	

4.4.2.1. AmendMeterRouteDetails/AmendSiteAccessDetails

Transaction Definition Table cross-reference	This interface realises the following transactions from the Transaction Definition Table: • 66– Meter Site Access Information Change from User • 67– Meter Site Access Information Change from Network Operator
Trigger	This interface is triggered when either a User or Network Operator makes a change to a customer's site access data.
Pre-conditions	None
Post-conditions	Receiving participant has recorded the data change.
Transaction acknowledgment specific event codes	3677 (Also the generic event codes 3603, 3659, 3662, 3673 can be used)

The AmendMeterRouteDetails/AmendSiteAccessDetails transaction is used by the User or Network Operator to notify the other participant of a change to a customer's site access data.

Transaction Data Elements

Transaction:	AmendMeterRouteDetails/ AmendSiteAccessDetails
Received From:	User or Network Operator
Sent To:	Network Operator or User

Data Element	Victoria & SA/WA Mandatory / Optional / Not Required	Usage
NMI	M	
CHECKSUM	M	IMPLEMENTED AS AN ATTRIBUTE OF THE NMI ASEXML ELEMENT
METERREADFREQUENCY	O	AT LEAST ONE OF THESE ELEMENTS MUST BE POPULATED
ACCESSDETAILS	O	
DOGCODE	O	
METERPOSITION	O	
LAST MODIFIEDDATETIME	M	MAYBE USED BY THE RECIPIENT TO ENSURE THAT THIS IS THE LATEST DATA.

The transaction is implemented as the AmendMeterRouteDetails/ AmendSiteAccessDetails transaction in aseXML utilising

thexsi:type="ase:GasStandingDataUpdate" construct for theAmendSiteAccessDetails element. The amendMeterRouteDetails/AmendSiteAccessDetails transaction is in the following format:

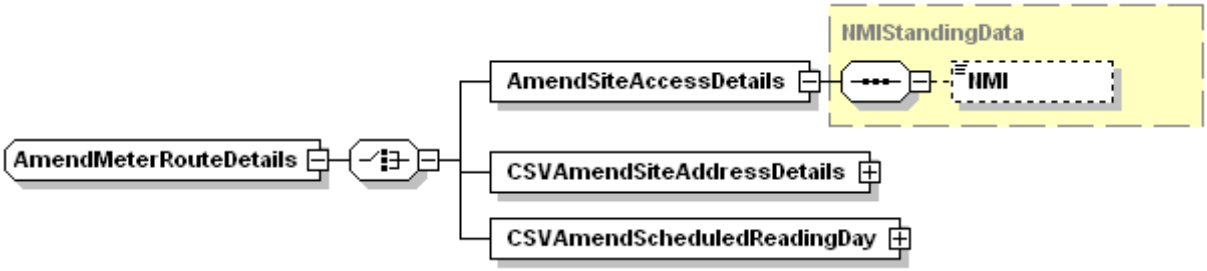

Figure 4-60 AmendMeterRouteDetails/AmendSiteAccessDetails aseXML schema

The GasStandingDataUpdate type construct is in the following format:

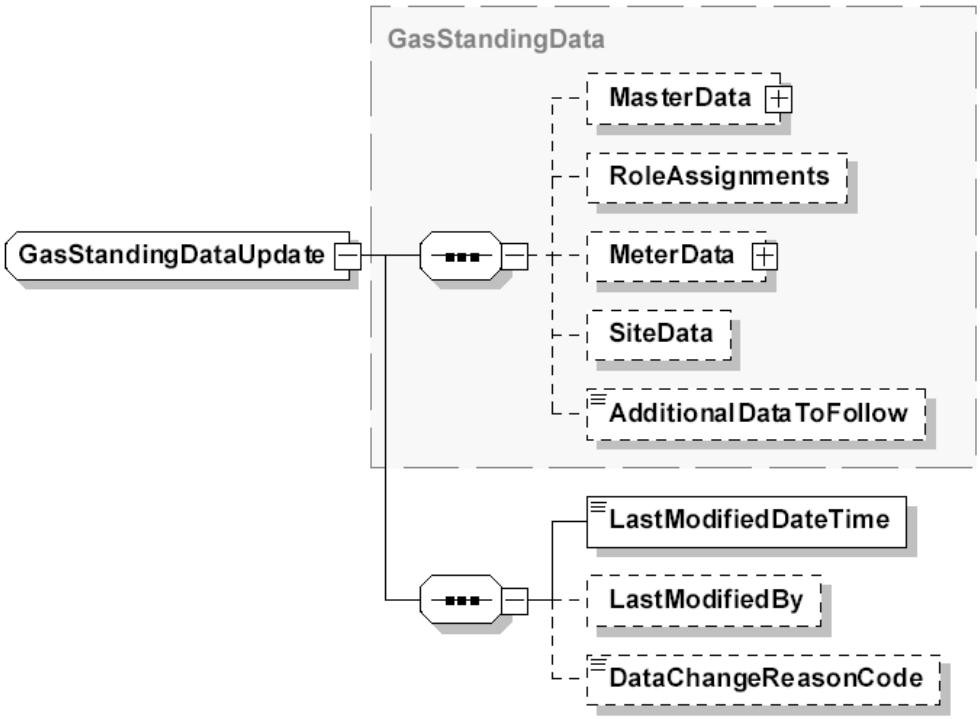

Figure 4-61 GasStandingDataUpdate type aseXML schema

XML Sample

```
<Header>
    <From description="">FBSTEST</From>
    <To description="">DEV</To>
    <MessageID>20120302150712180</MessageID>
    <MessageDate>2012-03-02T14:06:45+10:00</MessageDate>
    <TransactionGroup>SITE</TransactionGroup>
    <Priority>Low</Priority>
    <Market>SAGAS</Market>
</Header>
<Transactions>
    <Transaction transactionID="FBSTEST-20120302150645789" transactionDate="2012-03-
02T14:06:45+10:00">
        <AmendMeterRouteDetails version="r19">
            <AmendSiteAccessDetails xsi:type="ase:GasStandingDataUpdate" version="r29">
```

```
                <NMI checksum="7">5767656543</NMI>
                <MeterData>
                    <BasicMeter>
                        <MeterReadFrequency>Monthly</MeterReadFrequency>
                    </BasicMeter>
                </MeterData>
                <SiteData>
                    <DogCode>Savage</DogCode>
                </SiteData>
                <LastModifiedDateTime>2012-03-02T14:06:45+10:00</LastModifiedDateTime>
            </AmendSiteAccessDetails>
        </AmendMeterRouteDetails>
    </Transaction>
</Transactions>
```


4.4.3. Site Address Information

Site address information is used mainly to manage and optimise meter reading routes. Changes to this information may come from a customer – via the User, or identified by the Network Operator through changes to municipal boundaries, etc.

The activity diagram below shows a high level view of this process.

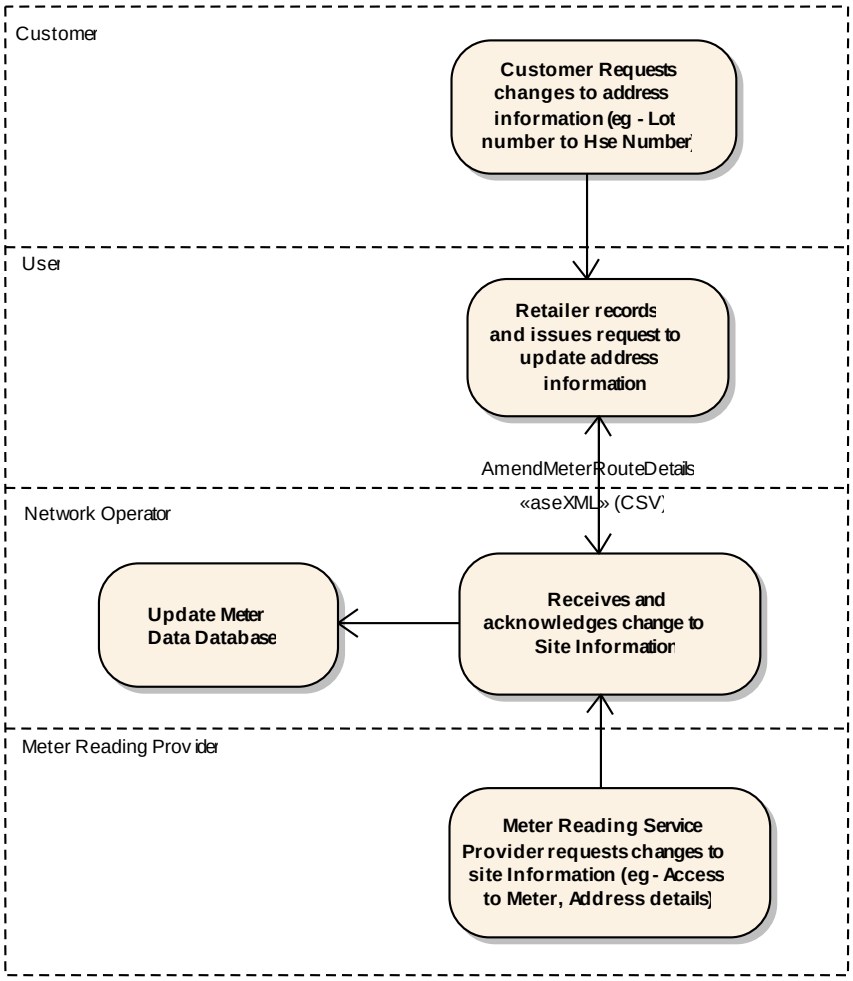

Figure 4-62 Update Site Address Information Activity Diagram

Process Sequence

Either a Network Operator or a User may become aware of a change to the site address data that is maintained by both participants. When either of the participants makes an update to this data an AmendMeterRouteDetails transaction containing a CSVAmendSiteAddressDetails element is generated and forwarded to the other applicable participant. The transaction is also triggered if a User makes a change to a customer's characterisation data.

The diagram below shows the sequence of events for this transaction:

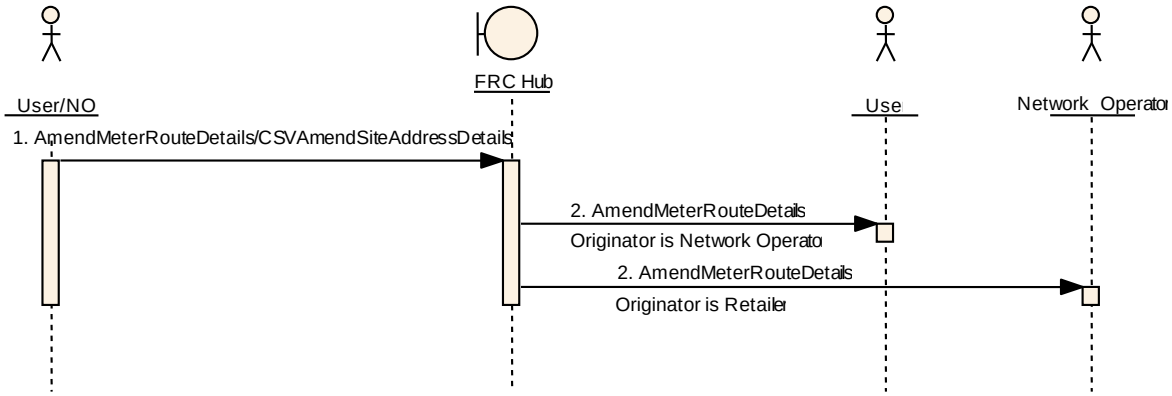

Figure 4-63 Update Site Address Information Sequence Diagram

ID	aseXML Transaction	From Object	To Object	Process Flow
1	AmendMeterRouteDetails/ CSVAmendSiteAddressDetails	User or Network Operator	FRC Hub	DB1
2	AmendMeterRouteDetails/ CSVAmendSiteAddressDetails	FRC Hub	Network Operator or User	

4.4.3.1. AmendMeterRouteDetails/CSVAmendSiteAddressDetails

Transaction Definition Table cross-reference	This interface realises the following transactions from the Transaction Definition Table: • 68 – Supply Point Information • 69 – Address Information Change from DB
Trigger	This interface is triggered when a User or a Network Operator changes a customer's address data or customer classification or a User makes a change to a customer's characterisation data.
Pre-conditions	None
Post-conditions	Receiving participant has recorded the changed data

Transaction acknowledgment specific event codes	3665, 3666, 3667, 3668, 3670, 3672, 3674, 3677 (Also the generic event codes 3603, 3659, 3662, 3673 can be used)

The AmendMeterRouteDetails/CSVAmendSiteAddressDetails transaction is used by the User or Network Operator to notify the other participant of a change to a customer's site address or customer classification or characterisation data. The data is provided in CSV format.

Transaction Data Elements

Transaction:	AmendMeterRouteDetails/ CSVAmendSiteAddressDetails
Received From:	User (68) or Network Operator (69)
Sent To:	Network Operator (68) or User (69)

Data Element	Victoria and SA/WA Mandatory / Optional / Not Required	Usage
RECORDCOUNT	M	SPECIFIES THE NUMBER OF RECORDS CONTAINED IN THE POPULATED CSV ELEMENT
CSVAMENDSITEADDRESSDETAILS/ CSVDATA	M	CONTAINS THE UPDATED ADDRESS DATA IN CSV FORMAT. IF RECORDCOUNT IS SET TO 0, THEN THE VALUE OF CSVDATA ELEMENT MUST BE SET TO **XSI:NIL="TRUE"**.

CSV Elements

Note:

1. In SA, a MIRN that requires an address and a Customer Classification change must be sent in two transactions. Each record in the CSV must only include **either** a change to the address **or** a change to the customer classification.
2. In SA, If Customer Classification but not the address details for a MIRN is changing, the Retailer should send only a Customer Classification Code change record and not the address change transaction.
3. The address elements in the CSV data align to the format and procedures of the address schema in aseXML, which in turn aligns to AS4590. The elements are identified below:

CSVAmendSiteAddressDetails/CSVData		
Heading	**Victoria and SA/WA Mandatory/ Optional**	**Comment**
NMI	M	
NMI_Checksum	M	
Flat_Or_Unit_Type	O	Optional, required where this optional field of the address is changing in SA. Address Type as per Australian Standard
Flat_Or_Unit_Number	O	Optional, required where this optional field of the address is changing in SA. Address Type as per Australian Standard
Floor_Or_Level_Type	O	Optional, required where this optional field of the address is changing in SA. Address Type as per Australian Standard
Floor_Or_Level_Number	O	Optional, required where this optional field of the address is changing in SA. Address Type as per Australian Standard
Building_Or_Property_Name_1	O	Optional, required where this optional field of the address is changing in SA. Address Type as per Australian Standard
Building_Or_Property_Name_2	O	Optional, required where this optional field of the address is changing in SA. Address Type as per Australian Standard. Not used in WA.
Location_Description	O	Optional, required where this optional field of the address is changing in SA. Address Type as per Australian Standard
House_Number_1	O	Optional, required where this optional field of the address is changing in SA. Address Type as per Australian Standard
House_Number_Suffix_1	O	Optional, required where this optional field of the address is changing in SA. Address Type as per Australian Standard
House_Number_2	O	Optional, required where this optional field of the address is changing in SA. Address Type as per Australian Standard. Not used in WA.
House_Number_Suffix_2	O	Optional, required where this optional field of the address is changing in SA. Address Type as per Australian Standard. Not used in WA.

CSVAmendSiteAddressDetails/CSVData		
Heading	**Victoria and SA/WA Mandatory/ Optional**	**Comment**
Lot_Number	O	Optional, required where this optional field of the address is changing in SA. Address Type as per Australian Standard
Street_Name_1	O	Optional, required where this optional field of the address is changing in SA. Address Type as per Australian Standard
Street_Type_1	O	Optional, required where this optional field of the address is changing in SA. Address Type as per Australian Standard
Street_Suffix_1	O	Optional, required where this optional field of the address is changing in SA. Address Type as per Australian Standard
Street_Name_2	O	Optional Address Type as per Australian Standard. Not used in WA.
Street_Type_2	O	Optional, required where this optional field of the address is changing in SA. Address Type as per Australian Standard. Not used in WA.
Street_Suffix_2	O	Optional, required where this optional field of the address is changing in SA. Address Type as per Australian Standard. Not used in WA.
Suburb_Or_Place_Or_Locality	O	Optional, required where this optional field of the address is changing in SA. Address Type as per Australian Standard
State_Or_Territory	M	
Postcode	M	
Delivery_Point_Identifier	O	Optional, required where this optional field of the address is changing in SA. Address Type as per Australian Standard
Address_Change_Effective_Date	M	
Customer_Characterisation	O	Required if transaction is initiated by a User. Not used in WA.
Customer_Classification_Code	O	Optional, required where customer classification is changing and transaction is initiated by a User.

CSVAmendSiteAddressDetails/CSVData		
Heading	**Victoria and SA/WA Mandatory/ Optional**	**Comment**
Customer_Threshold_Code	O	Optional, required where consumption threshold is changing and transaction is initiated by a Network Operator.
Last_Modified_Date_Time	M	May be used by the recipient to ensure this is the latest data.

The transaction is implemented as the AmendMeterRouteDetails/CSVAmendSiteAddressDetails transaction in aseXML. The transaction is in the following format:

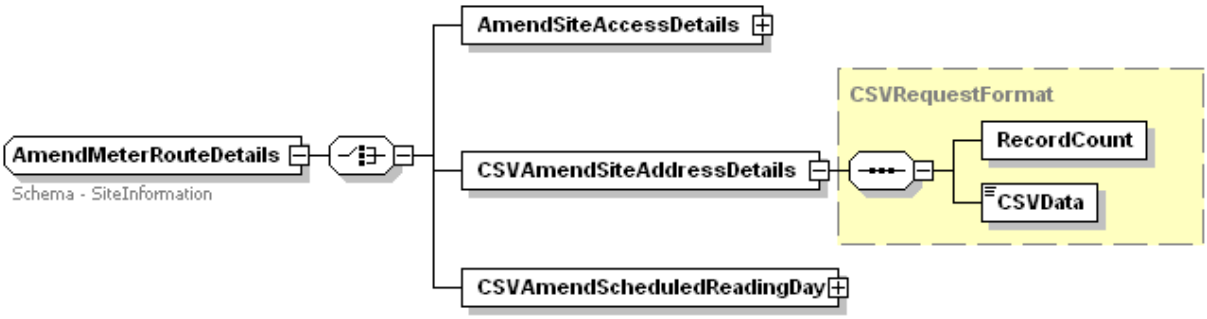

Figure 4-64 AmendMeterRouteDetails/CSVAmendSiteAddressDetails aseXML schema

XML Sample


```
<Header>
        <From description="">FBSTEST</From>
        <To description="">DEV</To>
        <MessageID>20120302150943869</MessageID>
        <MessageDate>2012-03-02T14:09:31+10:00</MessageDate>
        <TransactionGroup>SITE</TransactionGroup>
        <Priority>Low</Priority>
        <Market>SAGAS</Market>
    </Header>
    <Transactions>
        <Transaction transactionID="FBSTEST-20120302150931290" transactionDate="2012-03-
02T14:09:31+10:00">
            <AmendMeterRouteDetails version="r19">
                <CSVAmendSiteAddressDetails>
                    <RecordCount>1</RecordCount>

    <CSVData>NMI,NMI_Checksum,Flat_Or_Unit_Type,Flat_Or_Unit_Number,Floor_Or_Level_Type,Floor_O
r_Level_Number,Building_Or_Property_Name_1,Building_Or_Property_Name_2,Location_Description,House
_Number_1,House_Number_Suffix_1,House_Number_2,House_Number_Suffix_2,Lot_Number,Street_Name
_1,Street_Type_1,Street_Suffix_1,Street_Name_2,Street_Type_2,Street_Suffix_2,Suburb_Or_Place_Or_Loca
lity,State_Or_Territory,Postcode,Delivery_Point_Identifier,Address_Change_Effective_Date,Customer_Charac
terisation,Customer_Classification_Code,Consumption_Threshold_Code,Last_Modified_Date_Time
5767656543,7,,,,,,,,42,,,,,GEORGE,ST,,,,,Brompton,SA,5007,,2011-06-12,MB,,,2011-06-13T08:05:41+10:00
</CSVData>
                </CSVAmendSiteAddressDetails>
            </AmendMeterRouteDetails>
        </Transaction>
    </Transactions>
```

4.5. Network Billing

4.5.1. Overview

Network Billing transactions are used by Network Operators to provide Users with the details to support Distribution Use of System (DUoS) invoicing for Basic and Interval Meters.

The following table shows the Network Billing group of aseXML transactions and the corresponding transactions from the Table of Transactions.

aseXML Transaction	Table of Transactions	
Transaction Name	**Ref No**	**Transaction Type**
NetworkDUoSBillingNotification	331	Network DUoS Billing Details (Tariff V) for SA only
	332	Network DUoS Billing Details (Tariff D) for SA only
	331/332 (WA)	Network DUoS Billing Details (Tariff H) for WA only
	350	Network DUoS Billing Details (Excluded Services)
	351	Network DUoS Billing Details (Dispute Notification)
	352	Network DUoS Billing Details (Dispute Resolution)
	353	Network DUoS Billing Details (Payment Advice)

These business transactions will be mapped to the NETB Transaction Group in aseXML.

These transactions have been grouped together and defined below:

4.5.2. Network DUoS Billing Details

Network DUoS Billing Details are provided to the User from the Network Operator to enable DUoS invoicing to be carried out.

The activity diagram below shows a high level view of this process.

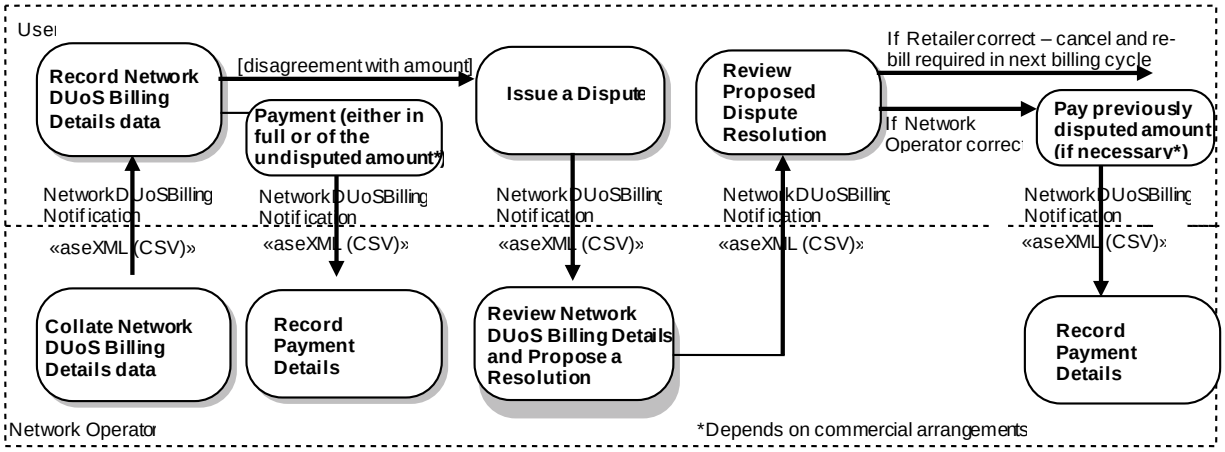

Figure 4-65 Network DUoS Billing Activity Diagram

Process Sequence

In accordance with an agreed schedule a Network Operator will collate the applicable Network DUoS Billing details for a User and forward these details in CSV format via a NetworkDUoSBillingNotification transaction. These details will be provided once per billing period as defined in contractual arrangements between Network Operators and Users.

A formal tax invoice will also be provided via a notice (e.g. e-mail). This invoice will list all the supporting information provided (via aseXML- csv). Where contractual arrangements define due dates for payments based on a defined period following receipt of an invoice, that period will start upon receipt of both the formal invoice and all supporting information. The user must then reconcile the total value of the NetworkDUoSBillingNotification to the formal tax invoice to confirm that there is a match.

If the User does not agree with the individual charges raised, it may dispute these charges at the transaction detail line level (including all individual charges contained within the transaction line) and notify the Network Operator of this dispute via a NetworkDUoSBillingNotification transaction carrying dispute details in CSV format.

The User may not dispute 'part' of a line – the whole line will be disputed.

For charges that are payable (which, depending on the contractual arrangements between Network Operators and users, may be the whole amount of the invoice or those charges that are not under dispute), the User will issue a Payment Advice via a NetworkDUoSBillingNotification transaction with details attached in CSV format.

For changes that are under dispute, the Network Operator will check its system, resolve the dispute and notify the User of a proposed resolution with a NetworkDUoSBillingNotification transaction where the details of the resolution are provided in CSV format. It is envisaged that e-mail or phone will be utilised to resolve the billing dispute.

Note: processes for handling part payments or interest payments for disputed amounts are not addressed by the transactions and processes defined in the document. This issue will be handled through manual processes.

Depending on the way the dispute has been resolved, cancel and re-bill may follow or no changes to billing details will apply. If a dispute is resolved in the User's favour, a full cancellation of the original line item and re-bill (if applicable) must be sent to the User in a subsequent NetworkDUoSBillingNotification transaction. Upon the dispute resolution, if additional payment is required, the User will issue a Payment Advice via NetworkDUoSBillingNotification transaction with details attached in CSV format.

A key principle for this process is disputes on individual charge(s), do not cause a NACK of the entire NetworkDUoSBillingNotification transaction, and also do not mean the User can withhold payment of the undisputed charges until the disputes are resolved.

Forward estimates are provided in SA via a 'notice' (not aseXML). Forward estimates can be disputed but not via an aseXML transaction.

'Retrospective' disputes, i.e. those which dispute a previously paid amount, may be submitted to Network Operators via aseXML. In the case of retrospective disputes in WA, where the User has paid the invoice line the User remits both the re-bill line and the cancel line included in the next invoice.

The diagram below shows the sequence of events for this transaction:

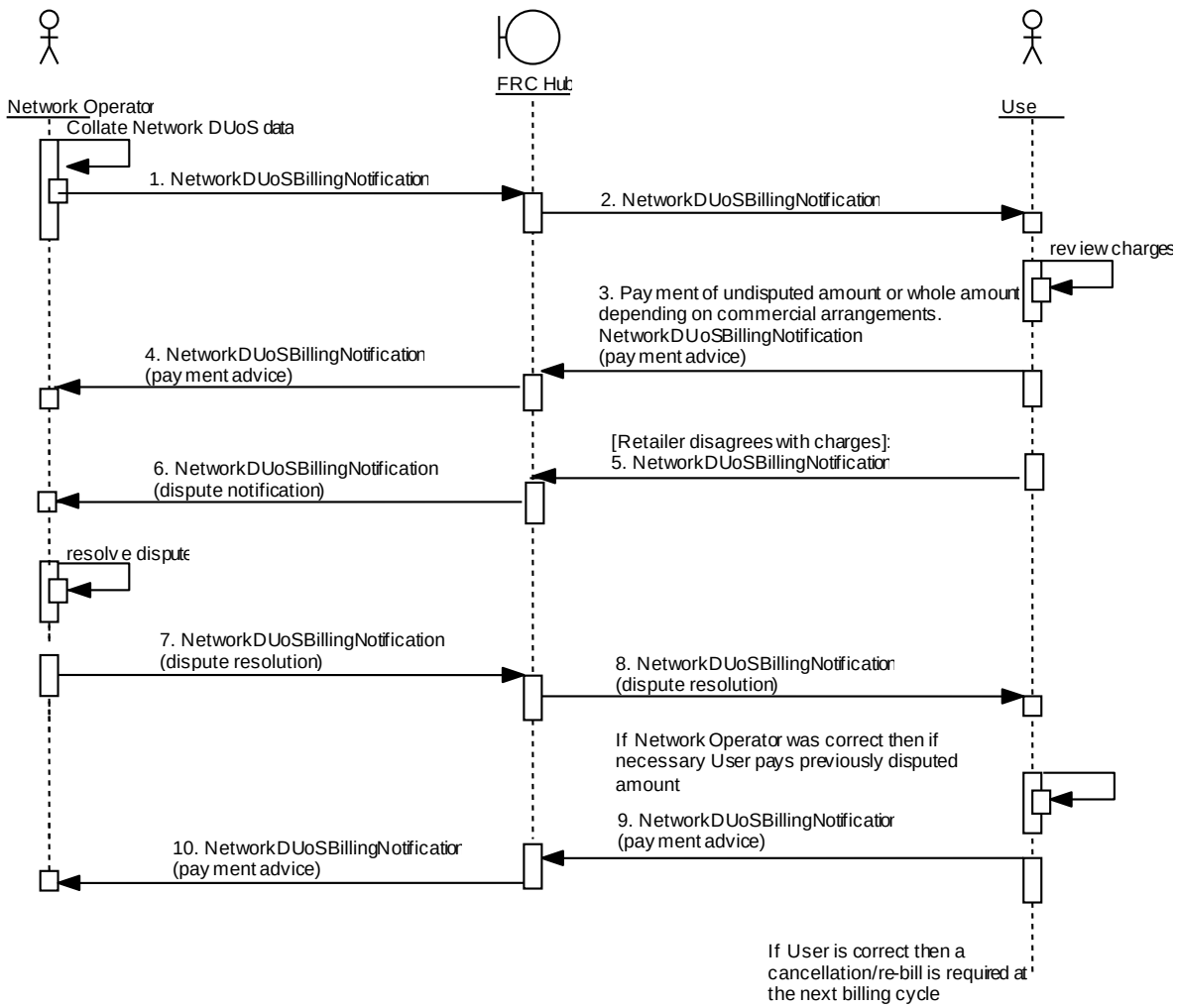

Figure 4-66 Network DUoS Billing Sequence Diagram

ID	aseXML Transaction	From Object	To Object	Process Flow
1	NetworkDUoSBillingNotification	Network Operator	FRC Hub	
2	NetworkDUoSBillingNotification	FRC Hub	User	
3	NetworkDUoSBillingNotification	User	FRC Hub	
4	NetworkDUoSBillingNotification	FRC Hub	Network Operator	
5	NetworkDUoSBillingNotification	User	FRC Hub	
6	NetworkDUoSBillingNotification	FRC Hub	Network Operator	
7	NetworkDUoSBillingNotification	Network Operator	FRC Hub	

ID	aseXML Transaction	From Object	To Object	Process Flow
8	NetworkDUoSBillingNotification	FRC Hub	User	
9	NetworkDUoSBillingNotification	User	FRC Hub	
10	NetworkDUoSBillingNotification	FRC Hub	Network Operator	

4.5.2.1. NetworkDUoSBillingNotification

Transaction Definition Table cross-reference	This interface realises the following transactions from the GPTWG Transaction Definition Table: • 331 – Network DUoS Billing Details (Tariff V) – SA only • 332 – Network DUoS Billing Details (Tariff D) – SA only • 331/332(WA) – Network DUoS Billing Details (Tariff H) – WA only • 350 - Network DUoS Billing Details (Excluded Services) • 351 - Network DUoS Billing Details (Dispute Notification) • 352 - Network DUoS Billing Details (Dispute Resolution) • 353 - Network DUoS Billing Details (Payment Advice)
Trigger	This interface is triggered as agreed between participants to provide tariff data (331, 332, 350) or when a User disagrees with network billing charges (351, 352,) or when a user pays network billing charges (353).
Pre-conditions	None
Post-conditions	User has recorded the CSV Network DUoS Billing data and resolved any disputes that may have arisen from the billing data.
Transaction acknowledgment specific event codes	3665, 3666, 3670, 3672, 3674 (Also the generic event codes 3603, 3659, 3662, 3673 can be used)

The NetworkDUoSBillingNotification transaction is used by the Network Operator to provide Network DUoS Billing data in CSV format to a User, to resolve charges disputes arisen from the billing data or to advise of payment.

Transaction Data Elements

Transaction:	NetworkDUoSBillingNotification
Received From:	Network Operator (331,332,350,352) or User (351,353)
Sent To:	User (331,332,350,352) or Network Operator (351,353)

Data Element	Victoria, SA and WA Mandatory / Optional / Not Required	Usage
RECORDCOUNT	M	SPECIFIES THE NUMBER OF RECORDS CONTAINED IN THE POPULATED CSV ELEMENT
CSVNETWORKDUOSDATARIFFV/CSVDATA	O	CONTAINS THE TARIFF V NETWORK DUOS DATA IN CSV FORMAT. SEE USAGE NOTES BELOW THIS TABLE. IF RECORDCOUNT IS SET TO 0, THEN THE VALUE OF CSVDATA ELEMENT MUST BE SET TO **XSI:NIL="TRUE"**.
CSVNETWORKDUOSDATARIFFD/CSVDATA	O	CONTAINS THE TARIFF D NETWORK DUOS DATA IN CSV FORMAT. SEE USAGE NOTES BELOW THIS TABLE. IF RECORDCOUNT IS SET TO 0, THEN THE VALUE OF CSVDATA ELEMENT MUST BE SET TO **XSI:NIL="TRUE"**.
CSVNETWORKDUOSDATARIFFH/CSVDATA	O	CONTAINS THE TARIFF H NETWORK DUOS DATA IN CSV FORMAT. SEE USAGE NOTES BELOW THIS TABLE. IF RECORDCOUNT IS SET TO 0, THEN THE VALUE OF CSVDATA ELEMENT MUST BE SET TO **XSI:NIL="TRUE"**.
CSVNETWORKDUOSDATAEXCLUDEDSERVICES/CSVDATA	O	CONTAINS THE BILLING DETAILS FOR EXCLUDED SERVICES NETWORK DUOS DATA IN CSV FORMAT. SEE USAGE NOTES BELOW THIS TABLE. IF RECORDCOUNT IS SET TO 0, THEN THE VALUE OF CSVDATA ELEMENT MUST BE SET TO **XSI:NIL="TRUE"**.

Transaction:	NetworkDUoSBillingNotification
Received From:	Network Operator (331,332,350,352) or User (351,353)
Sent To:	User (331,332,350,352) or Network Operator (351,353)

Data Element	Victoria, SA and WA Mandatory / Optional / Not Required	Usage
CSVNETWORK DUOSDATADISPUTENOTIFICATION/ CSVDATA	O	CONTAINS THE NETWORK DUOS BILLING DISPUTE DETAILS IN CSV FORMAT. SEE USAGE NOTES BELOW THIS TABLE. IF RECORDCOUNT IS SET TO 0, THEN THE VALUE OF CSVDATA ELEMENT MUST BE SET TO **XSI:NIL="TRUE"**.
CSVNETWORK DUOSDATADISPUTERESOLUTION/ CSVDATA	O	CONTAINS THE DISPUTE RESOLUTION DETAILS IN CSV FORMAT. SEE USAGE NOTES BELOW THIS TABLE. IF RECORDCOUNT IS SET TO 0, THEN THE VALUE OF CSVDATA ELEMENT MUST BE SET TO **XSI:NIL="TRUE"**.
CSVNETWORK DUOSDATAPAYMENTADVICE / CSVDATA	O	CONTAINS THE PAYMENT ADVICE DETAILS FOR NETWORK DUOS DATA IN CSV FORMAT. SEE USAGE NOTES BELOW THIS TABLE. IF RECORDCOUNT IS SET TO 0, THEN THE VALUE OF CSVDATA ELEMENT MUST BE SET TO **XSI:NIL="TRUE"**.

Note that only one of the CSV elements in the above transaction can be populated at a time, i.e. either CSVNetworkDUoSDataTariffV, or CSVNetworkDUoSDataTariffD, or CSVNetworkDUoSDataTariffH, or CSVNetworkDUoSDataExcludedServices, or CSVNetworkDUoSDataDisputeNotification, or CSVNetworkDUoSDataDisputeResolution, or CSVNetworkDUoSDataPaymentAdvice can be populated.

CSV Elements

CSVNetworkDUoSDataTariffV/CSVData (Victoria and SA only)		
Heading	**Mandatory/ Optional**	**Comment**
NMI	M	
NMI Checksum	M	
Invoice_Number	M	
Transaction_ID	M	
Old_Transaction_ID	O	Required if Adjustment_Indicator is set to “C” for cancel; Optional if Adjustment_Indicator is set to “R” for re-bill; Blank at all times where Adjustment_Indicator is set to “N” for new.
Old_Invoice_Number	O	Required if Adjustment_Indicator is set to “C” for cancel; Optional if Adjustment_Indicator is set to “R” for re-bill; Blank at all times where Adjustment_Indicator is set to “N” for new.
Transaction_Date	M	
Adjustment_Indicator	M	
Period	M	This is the period (month) to which the charges relate (the consumption period). If the consumption period covers more than one month, then the last month of that consumption period is entered. (note: in Victoria ‘period’ is currently defined as the ‘the month in which this charge has been raised’)
Billing_Days	M	In relation to tariff "V" DUoS charges, the number of days in the bill period — calculated as the difference between the ReadFrom and ReadTo dates. [note this is the current Vic definition]
Variable_Peak	M	In SA, Envestra will not provide this information. The element will be populated with ‘0’.
Variable_Off_Peak	M	In SA, Envestra will populate this data element with 100% of the variable charge. Exclusive of GST
Fixed_Charge	M	Exclusive of GST

CSVNetworkDUoSDataTariffV/CSVData (Victoria and SA only)		
Heading	**Mandatory/ Optional**	**Comment**
Total	M	Exclusive of GST
GST_Amount	M	
Type_of_Read	M	
Consumption_MJ	M	
Current_Read_Date	M	
Previous_Read_Date	M	
Distributor_ID	M	The Network Operator's GBO ID
Network_Tariff_Code	M	

CSVNetworkDUoSDataTariffD/CSVData (SA only)		
Heading	**Mandatory/ Optional**	**Comment**
NMI	M	
NMI_Checksum	M	
Invoice_Number	M	
Transaction_ID	M	
Old_Transaction_ID	O	Mandatory if Adjustment_Indicator is set to "C" for cancel; Optional if Adjustment_Indicator is set to "R" for re-bill; Blank at all times where Adjustment_Indicator is set to "N" for new.
Old_Invoice_Number	O	Mandatory if Adjustment_Indicator is set to "C" for cancel; Optional if Adjustment_Indicator is set to "R" for re-bill; Blank at all times where Adjustment_Indicator is set to "N" for new.
Transaction_Date	M	
Adjustment_Indicator	M	

CSVNetworkDUoSDataTariffD/CSVData (SA only)		
Heading	**Mandatory/ Optional**	**Comment**
Period	M	This is the period (month) to which the charges relate (the consumption period). If the consumption period covers more than one month, then the last month of that consumption period is entered.
Max_MHQTY	M	In SA, Envestra will not provide this information and the data element will be populated as'0'
Max_MHQTP	M	In SA, Envestra will not provide this information and the data element will be populated as'0'
Expected_MHQ	M	In SA, this data element will contain the Contracted MDQ (in whole Megajoules)
Consumption_GJ	M	In SA, consumption data will not be provided.
Charge_TP	M	
GST_Amount	M	
Distributor_ID	M	The Network Operator's GBO ID
Network_Tariff_Code	M	

CSVNetworkDUoSDataTariffH/CSVData – WA only		
Heading	**Mandatory/ Optional**	**Comment**
NMI	M	
NMI_Checksum	M	
Invoice_Number	M	Number of covering "Paper Invoice"
Transaction_ID	M	Invoice line item number
Old_Transaction_ID	O	Mandatory if Adjustment_Indicator is set to "C" for cancel; Optional if Adjustment_Indicator is set to "R" for re-bill; Blank at all other times

CSVNetworkDUoSDataTariffH/CSVData – WA only		
Heading	**Mandatory/ Optional**	**Comment**
Old_Invoice_Number	O	Mandatory if Adjustment_Indicator is set to "C" for cancel; Optional if Adjustment_Indicator is set to "R" for re-bill; Blank at all other times
Transaction_Date	M	This is the date the invoice line was created
Adjustment_Indicator	M	Cancelled, Re-billed or New
Billing_Days	M	The number of days in the bill period — calculated as the difference between the Current_Read_Date and Previous_Read_Date dates.
Variable_Charge_1	M	Used for *Usage* related variable charges for all steps. Exclusive of GST
Variable_Charge_2	M	Used for *Peak* usage related variable charges. Exclusive of GST
Variable_Charge_3	M	Used for *Overrun* related variable charges. Exclusive of GST
Variable_Charge_4	M	Used for all *Other* variable charges. Exclusive of GST
Fixed_Charge_1	M	Used for *Standing Charges*. Exclusive of GST
Fixed_Charge_2	M	Used for *User Specific Charges*. Exclusive of GST
Fixed_Charge_3	M	Used for *Demand Charges*. Exclusive of GST
Fixed_Charge_4	M	Used for *Other* fixed charges. Exclusive of GST
Total	M	Exclusive of GST
GST_Amount	M	
Type_of_Read	M	Actual, Estimated, Substituted or Deemed
Consumption_MJ	M	Consumption is in MJ
Current_Read_Date	M	Same as reading end date for basic meters, and read date for interval meters
Previous_Read_Date	M	Reading end date of the previous read period
Distributor_ID	M	The Network Operator's GBO ID
Network_Tariff_Code	M	The 4 digit distribution tariff defined in the RMP with a 6 digit extension making the haulage charges specific for the MIRN

The CSVNetworkDUoSDataTariffD/CSVData format will be used to provide charge details for TariffD, Negotiated Services and Term Sheet charges. The charges will be contained in separate csv files based on these three charge types. The charge types can be determined by looking at the Network_Tariff_Code CSV element within the file – if the Network Tarrif Code = 'nDemand' then the file contains all (and only) TariffD charges for the billing period. If the Network_Tariff_Code = 'Negotiated' then the file contains either all (and only) Negotiated Service charges or all (and only) Term Sheet charges for the billing period. The Network_Tariff_Code must be consistent across all charges in the file.

Line Items

For an Interval Meter, the CSV payload in the Network DUoS Billing Details Tariff H transaction sent to the Retailer shows each individual day's charges for each MIRN. Therefore if a billing period spans 14 days, there will be 14 Line Items per MIRN. Each Line Item will contain the day's Usage as well as the day's fixed charges. Each Line Item is to have its own Transaction ID (Note: in the case of basic meters each line will refer to a single meter reading).

This will enable the Retailer to match the daily consumption received via the 'Interval Meter Data' transactions (defined in Appendix E) from the HTTPS Site, to each individual line item within the invoice.

As an example – a billing period of 14 days for a MIRN would look similar to this:

NMI	NMI_Checksum	Invoice_Number No	Transaction_ID	Old_Transaction_ID	Old_Invoice_Number No	Transaction_Date	Adjustement_Indicator	Billing_ Days	Variable_Charge_1	Variable_Charge_2	Variable_Charge_3	Variable_Charge_4	Fixed_Charge_1	Fixed_Charge_2	Fixed_Charge_3	Fixed_Charge_4	Total	GST_Amount	Type_of_Read	Consumption_MJ	Current_ Read_Date	Previous_Read_Date	Distributor_ID	Network_Tariff_Co
5600002200	6	1438	759444			15/06/2004	N	1	66.51	0	0	0	1.38	8	0	0	75.89	7.59	A	14335	1/06/2004	31/05/2004	ALN	1B1R000
5600002200	6	1438	759445			15/06/2004	N	1	63.22	0	0	0	1.38	8	0	0	72.6	7.26	A	13595	2/06/2004	1/06/2004	ALN	1B1R000
5600002200	6	1438	759446			15/06/2004	N	1	63.69	0	0	0	1.38	8	0	0	73.07	7.31	A	13697	3/06/2004	2/06/2004	ALN	1B1R000
5600002200	6	1438	759447			15/06/2004	N	1	63.25	0	0	0	1.38	8	0	0	72.63	7.26	A	13603	4/06/2004	3/06/2004	ALN	1B1R000
5600002200	6	1438	759448			15/06/2004	N	1	62.77	0	0	0	1.38	8	0	0	72.15	7.22	A	13499	5/06/2004	4/06/2004	ALN	1B1R000
5600002200	6	1438	759449			15/06/2004	N	1	63.23	0	0	0	1.38	8	0	0	72.61	7.26	A	13598	6/06/2004	5/06/2004	ALN	1B1R000
5600002200	6	1438	759450			15/06/2004	N	1	60.46	0	0	0	1.38	8	0	0	69.84	6.98	A	13003	7/06/2004	6/06/2004	ALN	1B1R000
5600002200	6	1438	759451			15/06/2004	N	1	63.5	0	0	0	1.38	8	0	0	72.88	7.29	A	13655	8/06/2004	7/06/2004	ALN	1B1R000
5600002200	6	1438	759452			15/06/2004	N	1	61.38	0	0	0	1.38	8	0	0	70.76	7.08	A	13199	9/06/2004	8/06/2004	ALN	1B1R000
5600002200	6	1438	759453			15/06/2004	N	1	63.71	0	0	0	1.38	8	0	0	73.09	7.31	A	13701	10/06/2004	9/06/2004	ALN	1B1R000
5600002200	6	1438	759454			15/06/2004	N	1	63.19	0	0	0	1.38	8	0	0	72.57	7.26	A	13589	11/06/2004	10/06/2004	ALN	1B1R000
5600002200	6	1438	759455			15/06/2004	N	1	62.75	0	0	0	1.38	8	0	0	72.13	7.21	A	13495	12/06/2004	11/06/2004	ALN	1B1R000
5600002200	6	1438	759456			15/06/2004	N	1	62.83	0	0	0	1.38	8	0	0	72.21	7.22	A	13512	13/06/2004	12/06/2004	ALN	1B1R000
5600002200	6	1438	759456			15/06/2004	N	1	62.5	0	0	0	1.38	8	0	0	71.88	7.19	A	13441	14/06/2004	13/06/2004	ALN	1B1R000

The above is a typical example of what each MIRN will look like per 14 day billing period covering consumption on 01/06/2004 – 14/06/200

Dates

The dates as shown in the above example reflect as follows:

The Current Read Date is = to the Gas Day being charged for

The Previous Read Date is = to the Calendar Day before the Gas Day being charged for

Therefore a Current Read Date of 10 June 2004 reflects the consumption for the gas day 10 June 2004.

Disputes for Interval Metered Sites

1. Disputes received for Non-Consumption reasons

(a) If a Retailer disputes an invoice claiming that the MIRN does not belong to them, then the Retail MUST dispute every line individually for that MIRN contained within the billing period.

(b) If a Retailer wishes to dispute a charge contained within one line item within a billing period (say line 6 in the above diagram), the Retailer must be able to do so without having to dispute any other line items.

2. Disputes regarding Consumption

(a) If a Retailer disagrees with the consumption, notification will not be via the Dispute process but via the MDV process. In which case, if a energy reading is revised for a particular day / line item, then we understand that all reads thereafter will need to be unaccumulated and re-accumulated to the end of the billing period. This will generate the required Cancel/Rebill lines.

Payments for Interval Metered Sites

The Retailer must submit a separate NetworkDUoSBillingNotification (Payment Advice) for each individual line item. Therefore in the above example, the Retailer would need to send in 14 NetworkDUoSBillingNotifications (Payment Advice) lines for the one MIRN's usage for the billing period.

CSVNetworkDUoSDataExcludedServices/CSVData		
Heading	**Mandatory/ Optional**	**Comment**
NMI	M	
NMI_Checksum	M	
Invoice_Number	M	
Transaction_ID	M	
Old_Transaction_ID	O	Required if Adjustment_Indicator is set to "C" for cancel; Optional if Adjustment_Indicator is set to "R" for re-bill; Blank at all times where Adjustment_Indicator is set to "N" for new.
Old_Invoice_Number	O	Required if Adjustment_Indicator is set to "C" for cancel; Optional if Adjustment_Indicator is set to "R" for re-bill; Blank at all times where Adjustment_Indicator is set to "N" for new.
Transaction_Date	M	
Adjustment_Indicator	M	
Work_Request_Number	O	
RB_Reference_Number	O	Where a number has been provided as an RB_Reference_Number, in the originating Service Order then it must be provided
Excluded_Services_Code	M	
Line_Description	M	
Service_Date	M	
After_Hours_Ind	M	
Completion_Code	O	
Quantity	M	
Rate	M	
Excluded_Service_Charge	M	GST exclusive
GST_Amount	M	
Local_Capacity_Expiry_Date	O	If LCCs apply, then this element is Required

CSVNetworkDUoSDataDisputeNotification/CSVData		
Heading	**Mandatory/ Optional**	**Comment**
NMI	M	
NMI_Checksum	M	
Invoice_Number	M	
Transaction_ID	M	
Transaction_Date	M	
Disputed_Amount_GST_Excl	M	
Disputed_Amount_GST_Incl	M	
Disputed_GST_Amount	M	
Dispute_Reason_Code	M	
Dispute_Comment	O	Required if Dispute_Reason_Code is set to OTHR

Note: There is only one dispute transaction returned per network charge transaction line, therefore one Dispute_Comments field for each line is returned with the CSVNetworkDUoSDataDisputeNotification, or CSVNetworkDUoSDataDisputeResolution transaction. The Dispute_Comments field can include “free text” comments.

To assist in the efficiency of the business process, the User should avoid disputing each unique transaction id more than once. However, nothing in this document limits the User’s rights to dispute a transaction id more than once, either pre or post payment (as defined in the contractual arrangements between Network Operators and Users)

If a transaction is in the midst of dispute action and is subsequently cancelled by the Network Operator, the existing dispute action ends, and no further action is required. If the transaction is subsequently rebilled by the Network Operator (having cancelled the original transaction), and the User is satisfied with the rebilled transaction, no further action is required.

However, if the User is not satisfied with the rebilled transaction, the User can raise a new Dispute Notification. This action is allowed because the Network Operator has created a new transaction when processing the rebilled transaction (ie. has a different Transaction_ID from the original transaction), and the User is disputing this new transaction, effectively starting a new dispute on what is essentially an old transaction.

Where a Dispute Notification is not answered by the Network Operator, no further action will be made until a Dispute Notification is cancelled or a Dispute Resolution transaction is provided by the Network Operator.

The MeterDataVerification process, rather than the billing dispute process, should be used to address issues with meter data. This would typically occur prior to receipt of invoices. However, this does not restrict the user's rights to dispute the consumption amount or any other amount in the network operator's invoice in the billing dispute process.

CSVNetworkDUoSDataDisputeResolution/CSVData		
Heading	**Mandatory/ Optional**	**Comment**
NMI	M	
NMI_Checksum	M	
Invoice_Number	M	
Transaction_ID	M	
Dispute_Reason_Code	M	Populate with Dispute Reason Code from DisputeNotification transaction
Dispute_Comment	O	Required if Dispute_Reason_Code is set to OTHR, may be used to identify resolution
Resolution_Date	M	
Agreed_Amount_GST_Excl	M	
Agreed_Amount_GST_Incl	M	
Agreed_GST_Amount	M	

In WA, the line items within the DisputeResolution transaction are displayed in 4 different formats in order to clearly indicate to the User the outcome of the Dispute.

1.1 If a dispute is received for a line item that is unpaid and the dispute is resolved in favour of the Network Operator, the DisputeResolution transaction will show the same amounts as those of the original invoiced amounts, indicating that the line item is to be paid.

1.2 If a dispute is received for a line item that is unpaid and the dispute is resolved in favour of the User, the DisputeResolution transaction will show zeros for all amounts, indicating that the line item is not to be paid (ie Cancel or Cancel/Rebill will follow in the next invoice).

1.3 If a dispute is received for a line item that has been previously paid and the dispute is resolved in favour of the Network Operator, the DisputeResolution transaction will show zeros for all amounts, because the line item has already been paid.

1.4 If a dispute is received for a line item that has been previously paid and the dispute is resolved in favour of the User, the DisputeResolution transaction will show the same amounts as those of the original invoiced and paid amounts but multiplied by –1 to show the amounts as negative amounts. This indicates to the User that a PaymentNotification will be required for both the Cancel (negative) and Rebill line items in the new invoice.

Dispute resolution codes are not used. The outcome of the dispute is provided in the DisputeResolution transaction through the 'Agreed amount' and through (optional) comments in the Dispute_Comment data element.

CSVNetworkDUoSDataPaymentAdvice/CSVData		
Heading	**Mandatory /Optional**	**Comment**
NMI	M	
NMI_Checksum	M	
Invoice_Number	M	The original invoice number of the line item
Transaction_ID	M	
GST_Inclusive_Amount_Paid	M	
GST_Amount	M	GST amount paid
GST_Exclusive_Amount_Paid	M	
Paid_Date	O	

Note: The Network Operator is required to raise a cancel/re-bill on a resolved agreed amount, the User will then raise a subsequent payment advice relating to the agreed amount.

Where the dispute resolution does not change the original amount, a Network Operator cancel/re-bill is not required, the User will release the payment in accordance with relevant haulage contracts.
The transaction is implemented as the NetworkDUoSBillingNotification transaction in aseXML.
The transaction is in the following format:

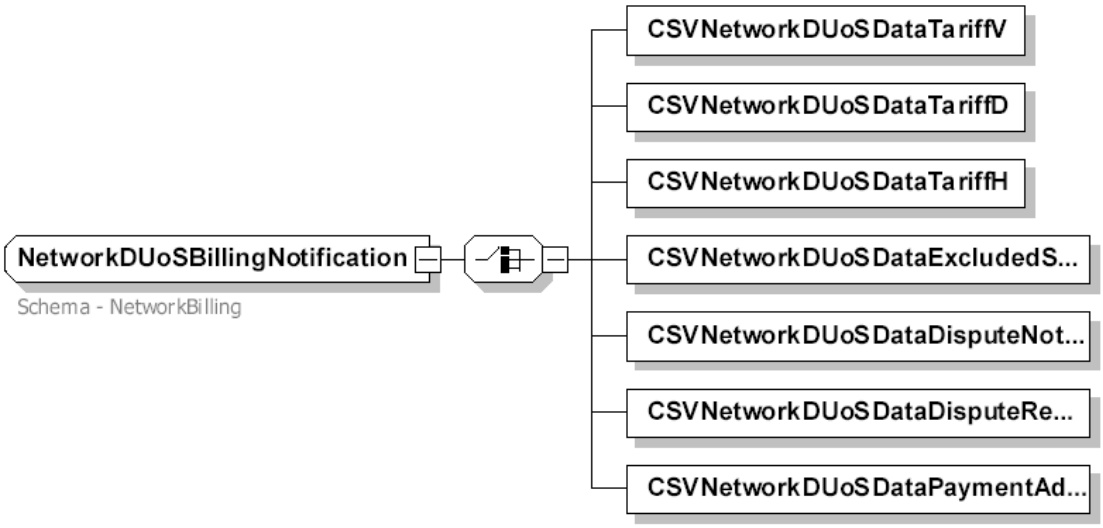

Figure 4-67 NetworkDUoSBillingNotification aseXML schema

XML Sample

<Header>

```
    <From description="FBSTEST">FBSTEST</From>
    <To description="FBS">FBS</To>
    <MessageID>FBSTEST-Msg-555624666277</MessageID>
    <MessageDate>2012-04-02T13:58:01.524+10:00</MessageDate>
    <TransactionGroup>NETB</TransactionGroup>
    <Priority>Low </Priority>
    <Market>SAGAS</Market>
  </Header>
  <Transactions>
    <Transaction transactionID="FBSTEST-Msg-555624666277" transactionDate="2012-04-
02T13:58:01.524+10:00">
      <NetworkDUoSBillingNotification version="r13">
        <CSVNetworkDUoSDataTariffD>
          <RecordCount>000000001</RecordCount>
<CSVData>NMI,NMI_Checksum,Invoice_Number,Transaction_ID,Old_Transaction_ID,Old_Invoice_Number,T
ransaction_Date,Adjustment_Indicator,Period,Max_MHQTY,Max_MHQTP,Expected_MHQ,Consumption_GJ,
Charge_TP,GST_Amount,Distributor_ID,Network_Tariff_Code
"5555157981",6,555477786661,"111555888777",,,"2012-03-
28","N","201203",0,0,1350000,0.000,1574.00,157.40,"FBSTEST","Negotiated"
</CSVData>
        </CSVNetworkDUoSDataTariffD>
      </NetworkDUoSBillingNotification>
    </Transaction>
  </Transactions>
```

4.6. Customer Details Information (SA Only)

4.6.1. Overview

Changes to Customer Details information is initiated by the User and sent to the Network Operator to maintain the most up to date Customer Contact Information. The Network Operator uses this information to support contact management in relation to emergency and fault calls.

The following table shows the Customer Details aseXML transaction and the corresponding transactions from the Table of Transactions.

aseXML Transaction	Table of Transactions	
Transaction Name	Ref No	Transaction Type
CustomerDetailsNotification	70	Amend Customer Details

This business transaction will be mapped to the "CUST" Transaction Group in aseXML.

The transaction has been defined below.

4.6.2 Amend Customer Details

Customer Contact information assists the Network Operator in terms of handling emergency and fault calls.

The Retailer has the primary contact relationship with the customer and is more likely to be notified of any changes to Customer Contact details.

Under the National Energy Retail Rules, changes to Customer Contact details are to be supplied to the Network Operator.

The CustomerDetailsNotification transaction is used by a Retailer to notify the Network Operator of changes to Customer contact details.

The activity diagram below shows a high level view of this process.

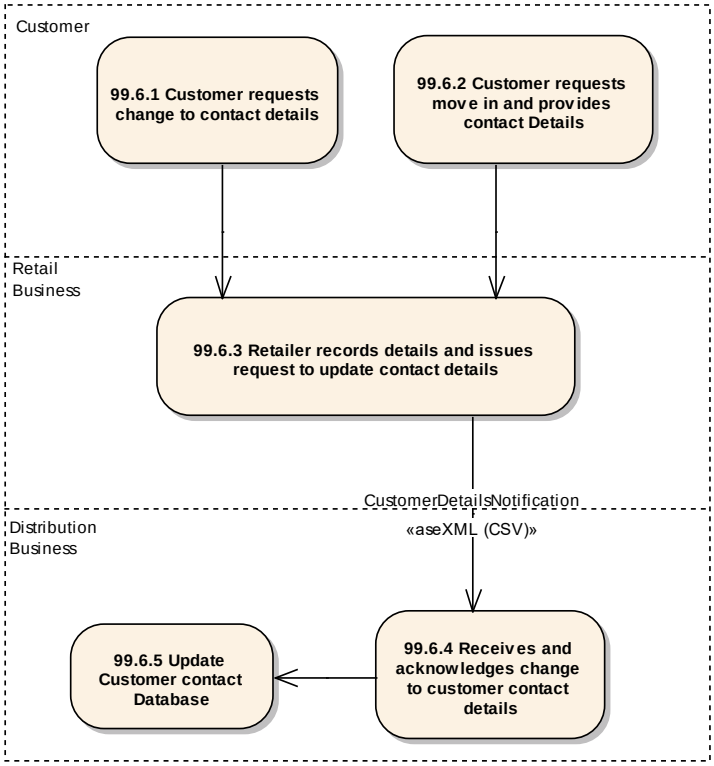

Figure 4-68 Amend Customer Details Activity Diagram

Process Sequence

In the course of managing Customer contact details a User may wish to amend Customer contact details for a number of MIRNs. The changes are forwarded via the CustomerDetailsNotification transaction containing a CSVCustomer element to the Network Operator to enable updating of the Network Operator held data.

A change to customer contact details can occur as a result of

- A customer notifying the Retail that their contact details have changed.
- A move in situation has occurred and as a consequence the contact details for that premise require updating.

The diagram below shows the sequence of events for this transaction:

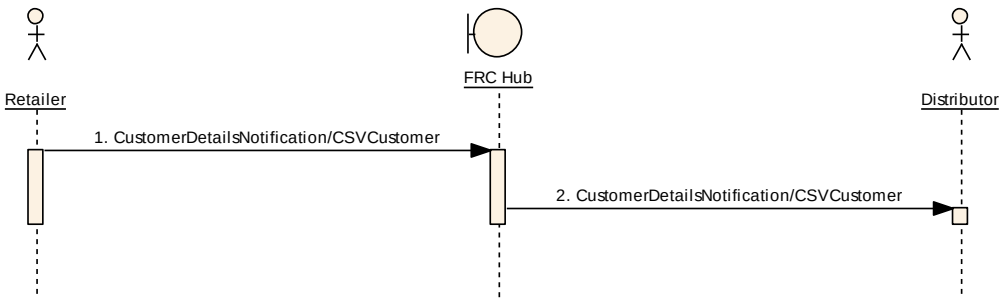

Figure 4-69 Customer Details Change Sequence Diagram

ID	ASEXML TRANSACTION	FROM OBJECT	TO OBJECT	PROCESS FLOW
1	CustomerDetailsNotification/ CSVCustomer	Retailer	FRC Hub	
2	CustomerDetailsNotification/ CSVCustomer	FRC Hub	Network Operator	

4.6.2.1 CustomerDetailsNotification/CSVCustomer

TRANSACTION DEFINITION TABLE CROSS-REFERENCE	THIS INTERFACE REALISES THE FOLLOWING TRANSACTIONS FROM THE TRANSACTION DEFINITION TABLE: • 70 – AMEND CUSTOMER DETAILS
Trigger	This interface is triggered when a Retailer makes a change to a MIRN's Customer details
Pre-conditions	None
Post-conditions	Network Operator possesses updated customer details
Transaction acknowledgment specific event codes	3665, 3666, 3670, 3672, 3674, 3677

The CustomerDetailsNotification/CSVCustomer transaction is used by the User to notify the Network Operator of changes to a MIRN's customer contact details.

Transaction Data Elements

TRANSACTION:	CUSTOMERDETAILSNOTIFICATION/ CSVCUSTOMER	
Received From:	User	
Sent To:	Network Operator	
Data Element	**Mandatory / Optional / Not Required**	**Usage**
RecordCount	M	Specifies the number of records contained in the populated CSV element
CSVCustomer/ CSVData	M	Contains the updated customer contact details data in CSV format. If RecordCount is set to 0, then the value of CSVData element must be set to xsi:nil="true".

CSV Elements

All specified fields are to be provided if available. Any fields sent as empty will be assumed to be empty and will be set to blank in the receivers database.

CSVCUSTOMER/CSVDATA		
Heading	Mandatory/ Optional	Comment
NMI	M	
NMI_Checksum	M	
Person_Name_Title	O	Contains customer's title
Person_Name_Given	O	Contains customer's first name
Person_Name_Family	O	Contains customer's surname, required if Business_Name is not populated

CSVCUSTOMER/CSVDATA		
Heading	Mandatory/ Optional	Comment
Business_ Name	O	Contains company or business name, required if Person_Name_Family is not populated
ContactDetail_ PersonName	O	Contains contact's mailing name or company name
Mail_ Address_Line_1	O	Contains formatted postal address details
Mail_ Address_Line_2	O	Contains formatted postal address details
Mail_ Address_Line_3	O	Contains formatted postal address details
Suburb_Or_ Place_Or_ Locality	M	Contains postal address suburb details
State_Or_Territory	M	Contains postal address state details
Postcode	M	Contains postal address postcode
ContactDetail_ PhoneNumber_1	O	Contains contact's primary phone number
ContactDetail_ PhoneNumber_2	O	Contains contact's secondary phone number
Sensitive_ Load_ Flag	O	A code that indicates whether the Retailer classifies the supply point as a sensitive load "Y" = Yes, "N" = No
Movement_ Type	M	A code that indicates the customer details update status"MI" = Move In, "MO" = Move Out, "UP" = Update

The transaction is implemented as the CustomerDetailsNotification/ CSVCustomer transaction in aseXML. The transaction is in the following format:

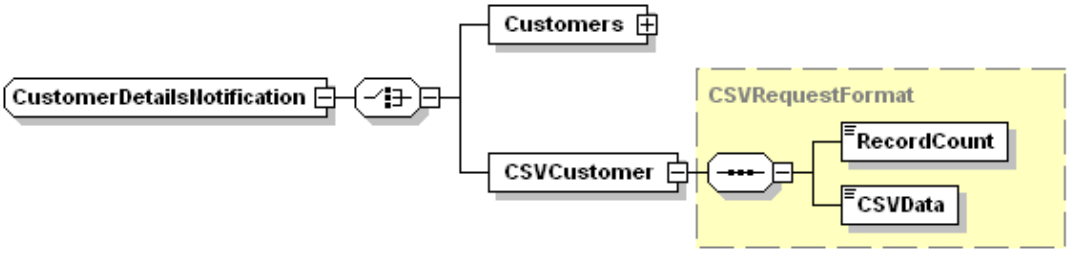

Figure 4-70 CustomerDetailsNotification/CSVCustomer aseXML schema

Sample Transaction


```
<Header>
    <From description="Energy Australia">ENGYASA</From>
    <To description="Envestra">ENVSA</To>
    <MessageID> CUSTDETSNOTIF-001</MessageID>
    <MessageDate>2011-09-27T00:09:17+10:00</MessageDate>
    <TransactionGroup>CUST</TransactionGroup>
    <Priority>Low</Priority>
    <Market>SAGAS</Market>
</Header>
<Transactions>
    <Transaction transactionID=" CUSTDETSNOTIF-001"  transactionDate="2011-09-27T00:09:17+10:00">
        <CustomerDetailsNotification version="r12">
            <CSVCustomer>
                <RecordCount>1</RecordCount>
                <CSVData>
NMI,NMI_Checksum,Person_Name_Title,Person_Name_Given,Person_Name_Family,Business_Name,Contact
Detail_PersonName,Mail_Address_Line_1,Mail_Address_Line_2,Mail_Address_Line_3,Suburb_Or_Place_Or_L
ocality,State_Or_Territory,Postcode,ContactDetail_PhoneNumber_1,ContactDetail_PhoneNumber_2,Sensitive_
Load_Flag,Movement_Type
5510555678,61MISS,CUST,NOTIF,CATION,  ,75 TEST
AVENUE,,,ADELAIDE,SA,5000,04256811111,0438887703,N,UP
                </CSVData>
            </CSVCustomer>
        </CustomerDetailsNotification>
    </Transaction>
</Transactions>
```


4.7. Life Support Information (SA Only)

4.7.1. Overview

Part 7 of the National Energy Retail Rules (NERR) places specific obligations on both Retailers and Distributors in relation to obtaining, storing, exchanging and managing Life Support information.

The transactions described in this section are to be used by Retailers and Distributors to support their respective obligation mentioned above.

The following table shows the aseXML transaction and the corresponding transactions from the Table of Transactions.

ASEXML TRANSACTION	TABLE OF TRANSACTIONS	
Transaction Name	Ref No	Transaction Type
LifeSupportNotification	80	Life Support Notification from RB
	81	Life Support Notification from DB
LifeSupportRequest	82	Life Support Request from RB
	83	Life Support Request from DB

This business transaction will be mapped to the "CUST" Transaction Group in aseXML.

The transaction has been defined below.

4.7.2. LifeSupportNotification (T80 and T81)

a) The initiator of the LifeSupportNotification can be a Current Retailer, prospective Retailer or a Distributor.

b) Where the Distributor or Retailer is informed by a customer that they require life support or there are changes to the life support information or requirement, they must advise the other party using the LifeSupportNotification with the information defined in the Transaction Data Elements table.

c) Following a change of Retailer, where the Distributor is the registration process owner, the Distributor must send the Current Retailer a LifeSupportNotification.

d) Where the Retailer or Distributor has completed the deregistration process for a Life Support customer they must send the other party an updated LifeSupportNotification.

e) In the absence of a relevant request, the LifeSupportNotification must be provided within one business day of the relevant data being updated or changed.

f) Where the prospective Retailer has provided a LifeSupportNotification to the Distributor and life support registration is no longer required:

i. The prospective Retailer must send the Distributor an updated LifeSupportNotification and

ii. The Distributor may update their records accordingly.

TRANSACTION DEFINITION TABLE CROSS-REFERENCE	THIS INTERFACE REALISES THE FOLLOWING TRANSACTIONS FROM THE GPTWG TRANSACTION DEFINITION TABLE: • 80 – LIFE SUPPORT INFORMATION CHANGE FROM RB • 81 – LIFE SUPPORT INFORMATION CHANGE FROM DB
Trigger	This interface is triggered when either a Retailer or Distributor makes a change to a customer's Life Support data.
Pre-conditions	None
Post-conditions	Receiving participant has recorded the data change.
Transaction acknowledgment specific event codes	

The Life Support Notification transaction is used by the Retailer or Distributor to notify the other participant of a change to a customer's Life Support data.

Transaction Data Elements

TRANSACTION:		LIFESUPPORTNOTIFICATION
Received From:		Retailer or Distributor
Sent To:		Distributor or Retailer
Data Element	**Mandatory / Optional / Not Required**	**Usage** Note – For Allowable Value information please see section of A1 AseXML Data Elements Participant Build Pack3 B2B System Interface Definitions
NMI	M	
Checksum	M	Implemented as an attribute of the NMI aseXML element
SiteAddress	O	
Reason	M	Allowable values for: "Update" "Reconciliation"
RegistrationOwner	O	Required if the initiator of the LifeSupportNotification is the Life

		Support registration process owner. The value of "YES" is required. Not required where LifeSupportStatus is None
LifeSupportStatus	M	
DateRequired	O	Required if Life Support Status is: • Registered - No Medical Confirmation • Registered - Medical Confirmation • Deregistered - No Medical Confirmation • Deregistered - Customer Advice • Deregistered - No Customer Response Not required if Life Support Status is None.
LSEquipment	O	Required if LifeSupportStatus is • Registered - No Medical Confirmation • Registered - Medical Confirmation Note: Where more than one allowable value is required, select one of the allowable values and provide the additional allowable value in the SpecialNotes field Not required when LifeSupportStatus is • Deregistered - No Medical Confirmation • Deregistered - Customer Advice • Deregistered - No Customer Response • None
LSContactName	O	Required if LifeSupportStatus is • Registered - No Medical Confirmation • Registered - Medical Confirmation

		Must be the name of the person who is the contact for the management of Life Support requirements. Not required when LifeSupportStatus is • Deregistered - No Medical Confirmation • Deregistered - Customer Advice • Deregistered - No Customer Response • None
LSPostalAddress	O	Required if LifeSupportStatus is • Registered - No Medical Confirmation • Registered - Medical Confirmation Must be the Customer's postal address for Life Support requirements. Not required when LifeSupportStatus is • Deregistered - No Medical Confirmation • Deregistered - Customer Advice • Deregistered - No Customer Response • None
LSPhoneNumber1	O	Required if LifeSupportStatus is • Registered - No Medical Confirmation • Registered - Medical Confirmation Must be the phone number of the person who is the contact for the management of Life Support requirements. Not required when LifeSupportStatus is • Deregistered - No Medical Confirmation • Deregistered - Customer Advice

		• Deregistered - No Customer Response • None
LSPhoneNumber2	O	Required if LifeSupportStatus is • Registered - No Medical Confirmation • Registered - Medical Confirmation Must be the phone number of the person who is the contact for the management of Life Support requirements. Not required when LifeSupportStatus is • Deregistered - No Medical Confirmation • Deregistered - Customer Advice • Deregistered - No Customer Response • None
LSContactEmailAddress	O	Required if LifeSupportStatus is • Registered - No Medical Confirmation • Registered - Medical Confirmation Must be the email address of the person who is the contact for the management of Life Support requirements where the initiator has obtained Explicit Informed Consent for the use of the email address. Not required when LifeSupportStatus is • Deregistered - No Medical Confirmation • Deregistered - Customer Advice • Deregistered - No Customer Response • None
PreferredContactMethod	O	

SpecialNotes	O	Required if LSEquipment is “Other”
LastModifiedDateTime	M	Date and time that the record was updated in the Initiator’s system

4.7.3. LifeSupportRequest (T82 and T83)

a) Where a Retailer or Distributor requires a confirmation of a current life support status at a MIRN they may send a LifeSupportRequest to the other party.

b) The Recipient of a valid LifeSupportRequest must provide a LifeSupportNotification and use best endeavours to respond within 2 business days and no later than 5 business days.

c) If a LifeSupportNotification is not received within 5 business days the Initiator may contact the Recipient.

d) The party responding to a LifeSupportRequest does not need to be the registration process owner[1].

e) An initiator must only send a maximum of one LifeSupportRequest per NMI per day.

f) If parties wish to obtain mass updates of information, parties must reach an agreement to use this transaction.

TRANSACTION DEFINITION TABLE CROSS-REFERENCE	THIS INTERFACE REALISES THE FOLLOWING TRANSACTIONS FROM THE GPTWG TRANSACTION DEFINITION TABLE: • 82 – LIFE SUPPORT REQUEST FROM RB • 83 – LIFE SUPPORT REQUEST FROM DB
Trigger	This interface is triggered when either a Retailer or Distributor needs to confirm the status of Life Support for a MIRN.
Pre-conditions	None
Post-conditions	
Transaction acknowledgment specific event codes	

Transaction Data Elements

[1] Registration Process Owner means - the party that took the initial contact from the customer which includes recording the medical confirmation that was supplied

TRANSACTION:	LIFESUPPORTREQUEST	
Received From:	Retailer or Distributor	
Sent To:	Distributor or Retailer	
Data Element	**Mandatory / Optional / Not Required**	**Usage** Note – For Allowable Value information please see section of A1 AseXML Data Elements Participant Build Pack3 B2B System Interface Definitions
NMI	M	
Checksum	M	Implemented as an attribute of the NMI aseXML element
Reason	M	Allowed Values: Confirm Life Support Data Quality Issue No response to rejected LSN Other
SpecialNotes	O	Required if Reason is "Other" Not required if Reason is • Confirm Life Support • Data Quality Issue • No response to rejected LSN • "Update" • "Reconciliation"

Appendix A. Data Dictionary

aseXML Data Elements[2]

aseXML Element Name	Element Name	Description	Attributes /Format	Length/ Decimal Places	Allowed Values
AcceptedCount	Accepted Count	The number of Meter Reads accepted	Integer		
AccessDetails	Special Access Arrangements	Access Instruction supplied by the User. This could be in relation to how to get into the property and/or locating the gas meter. This field may also include the details in relation to job initiator and contact details.	String	160	
	Site Access Information	Additional instruction as to how to locate the property and/or the whereabouts of the meter.	String	160	
actionType	Action Indicator	An indicator pertaining to Service Request that identifies whether that request is new, or modified.	String	Enum	"New" "Cancel" Note: Implemented as an attribute of "ServiceOrderRequest" element in aseXML schema
ActivityID	Activity ID	Identifier of the receiver's process that processed a CSV file.	Integer	10	
AdditionalDataToFollow	N/A	Used in MIRN Discovery Response transactions to indicate that additional MIRN data will be supplied	String	Enum	"true" "false"
Address	Address	Supply Point address in aseXML structured format. The allowed values and formats for address elements are contained within the aseXML Schema (in 'Enumerations.xsd' and "ClientInformation.xsd').			For WA, details about what address attributes to apply, please refer to the 'WA list of address attributes' spreadsheet published on AEMO website.

[2] In most cases aseXML uses enumerations of fully expanded descriptions. Exception to this rule is the use of codes that have been already in use in the electricity FRC. CSV data elements utilise acronyms and abbreviations instead.

aseXML Element Name	Element Name	Description	Attributes /Format	Length/ Decimal Places	Allowed Values
AdjustmentReasonCode	Adjustment Reason Code	A code that the Network Operator provides to the User which identifies the reason for the revised reading	String	Enum	"Under Read" "Over Read" "Under Estimate" "Over Estimate" "No Change"
AppointmentDetail/ Preferred/ Date	Appointment Date	Date Customer/User requires work to commence.	Date	10	ccyy-MM-dd
	Nominated Installation Date	In relation to a service Connection request the date in which the RB nominates the work to be completed by.	Date	10	ccyy-MM-dd
	Nominated Completion Date	In relation to a Service Connection request the date in which the DB nominates the work to be completed by.	Date	10	ccyy-MM-dd
AppointmentDetail/ Preferred/ Time	Appointment Time	Time Customer/User requires work to commence.	Time	14	hh:mm:ss+hh:mm (see 'time format' Section 4 – introduction).
checksum	MIRN Checksum	Is a number calculated by an algorithm for validation purposes and is an attribute of the MIRN	Integer	1	Note: Implemented as an attribute of "NMI" element in aseXML schema
COCNumber	COC Number	Certificate of Compliance. A number in which the Plumber will assign to this premise as provide by Plumbers Industry Commissions.	String	7	
CommunicationEquipmentPresent	Communication Equipment	For the purposes of MIRN discovery details on what metering communication equipment is on site.	String	Enum	"true" "false"
ContactDetail/ PersonName	Customer Name	Name of Customer a User passes to a Network Operator in relation to a Service Request. Passed in aseXML structured format			
ContactDetail/ PhoneNumber	Customer Contact Number	Contact telephone number pertaining to the requesting person. Passed in aseXML structured format			
CSVConsumptionData	N/A	Contains embedded data in CSV format			CSV file containing the fields defined in section 4.1.2.2 of this document
CSVCustomer/ CSVData	N/A	Contains embedded data in CSV format			CSV file containing the fields defined in section **Error! Reference source not found.** of this document

aseXML Element Name	Element Name	Description	Attributes /Format	Length/ Decimal Places	Allowed Values
CSVHistoryResponseData/ CSVData	N/A	Contains embedded data in CSV format			CSV file containing the fields defined in section 4.6.2.1 of this document
CSVMainsServiceRenewal/ CSVData	N/A	Contains embedded data in CSV format			CSV file containing the fields defined in section 4.6.2.1 of this document
CSVNetworkDUoSDataExcludedSer vices/ CSVData	N/A	Contains embedded data in CSV format			CSV file containing the fields defined in section 4.5.2.1 of this document
CSVNetworkDUoSDataTariffD/ CSVData	N/A	Contains embedded data in CSV format			CSV file containing the fields defined in section 4.5.2.1 of this document
CSVNetworkDUoSDataTariffH/ CSVData	N/A	Contains embedded data in CSV format			CSV file containing the fields defined in section 4.5.2.1 of this document
CSVNetworkDUoSDataTariffV/ CSVData	N/A	Contains embedded data in CSV format			CSV file containing the fields defined in section 4.5.2.1 of this document
CSVNetworkDUoSDataDisputeNotifi cation/CSVData	N/A	Contains embedded data in CSV format			CSV file containing the fields defined in section 4.5.2.1 of this document
CSVNetworkDUoSDataDisputeResol ution/CSVData	N/A	Contains embedded data in CSV format			CSV file containing the fields defined in section 4.5.2.1 of this document
CSVNetworkDUoSDataPaymentAdvi ce/CSVData	N/A	Contains embedded data in CSV format			CSV file containing the fields defined in section 4.5.2.1 of this document
CSVAmendScheduledReadingDay/ CSVData	N/A	Contains embedded data in CSV format			CSV file containing the fields defined in section 4.4.4.1 of this document
CSVAmendSiteAddressDetails/ CSVData	N/A	Contains embedded data in CSV format			CSV file containing the fields defined in section 4.4.3.1 of this document
CSVTimeExpiredMeters/ CSVData	N/A	Contains embedded data in CSV format			CSV file containing the fields defined in section 4.2.4.1 of this document
Current/ IndexValue	Current Index Value	Most recent validated meter index stored on the database.	Integer	7	
Current/ MeterData/ Currrent/ IndexValue	New Index Value	The Meter Reading index that will be processed to calculate the Energy Flow.	Integer	7	
Current/ ReadDate	Current Read Date	The date on which the Current Index Value was read.	Date	10	ccyy-MM-dd
CurrentRead/ IndexValue	Current Index Value	Most recent validated meter index stored on the database.	Integer	7	
CurrentRead/ ReadDate	Current Read Date	The date on which the Current Index Value was read.	Date	10	ccyy-MM-dd

aseXML Element Name	Element Name	Description	Attributes /Format	Length/ Decimal Places	Allowed Values
CustomerCharacterisation	Customer Characterisation	In relation to a customer, whether the customer is metropolitan or non-metropolitan and business or residential.	String	Enum	In SA: "Metropolitan Business" "Metropolitan Residential" "Non Metropolitan Business" "Non Metropolitan Residential" Not used in WA
CustomerClassificationCode	Customer Classification Code	In relation to a customer, whether the customer is residential or business, as per the NERL obligation.	String	20	"RES" = Residential Customer "BUS" = Business Customer
CustomerThresholdCode	Customer Threshold Code	In relation to a business customer, type of classification based on consumption thresholds, as per the NERL obligation	String	20	"LOW" = Business Customer with consumption from 0GJ up to 999GJ "HIGH" = Business Customer with consumption of 1000GJ or more.
DateOfAttemptedAccess	Date of Attempted Access	Date on which access was attempted and was not available	Date	10	ccyy-MM-dd
DateServiceOrderCompleted	Date Service Request Completed	Date on which the Service requested was completed.	Date	10	ccyy-MM-dd
DateTimeCSRAccessedCustomerRecord	Date CSR Accessed Customer Record	Date the Customer Service Representative initially accessed the record	Date Time	25	ccyy-MM-ddThh:mm:ss+hh:mm (see 'time format' Section 4 – introduction.)
	Time CSR Accessed Customer Record	Time the Customer Service Representative initially accessed the record			
DateTimeCSRProcessedTransaction	Date CSR Processed Transaction	Date Customer Service Representative activated the request.	Date Time	25	ccyy-MM-ddThh:mm:ss+hh:mm (see 'time format' Section 4 – introduction.)
	Time CSR process transaction	Time Customer Service Representative activated the request			

aseXML Element Name	Element Name	Description	Attributes /Format	Length/ Decimal Places	Allowed Values
DateRequired	Date Required	For a registration of Life Support, this date will be the date Life Support protections commence at the premises. For a deregistration of Life Support, this date will be the date Life Support protection ceases to be provided at the premises. For response to a Life Support Request, this will be the effective date of the Life Support registration in the participants system.	Date	10	ccyy-MM-dd

aseXML Element Name	Element Name	Description	Attributes /Format	Length/ Decimal Places	Allowed Values
DistributionTariff	Distribution Tariff	Part of the request for standing data from the Network Operator	String	Enum	In WA: 1A1R, 1A2R, 1B1R, 1B2R, 1B3R 1A1N, 1A2N, 1B1N, 1B2N, 1B3N 1D1R, 1D2R, 1D3R 1D1N, 1D2N, 1D3N 1K1R, 1K2R, 1K3R 1K1N, 1K2N, 1K3N 1V1R, 1V2R, 1V3R 1V1N, 1V2N, 1V3N In SA: 1Demand 2Demand 3Demand 4Demand 5Demand 6Demand 7Demand 8Demand 9Demand 0Demand Commercial Volume Negotiated NegotiatedVolume (Note: in Victoria, the only values are 'demand' or 'volume'). In SA, 'Negotitated' is used for both Negotiated Service charges and Term Sheet charges.

aseXML Element Name	Element Name	Description	Attributes /Format	Length/ Decimal Places	Allowed Values
DogCode	Dog Code	Code to indicate whether a dog is located at the premises and its temperament.	String	Enum	"Bluff" "Savage" "Tied" "Friendly" "Dog OK" "Dog Caution" "No Dog"
Event	Return Code	An element that may be returned with a transaction acknowledgement or a response transaction to identify errors encountered. Refer Ref[5]			
ExcludedServicesCharges/ ChargeItem/ Category	Excluded Services Category	Charge category of an excluded service	String	Enum	"Service" "Meter" "Logger" "O+M" "Mains" "Other"
ExcludedServicesCharges/ ChargeItem/ Amount	Excluded Services Amount	Excluded Services Charges that may apply in relation to a supply point and is part of the standing data request.	Numeric	9,2	
ExcludedServicesCharges/ ChargeItem/ ExpiryDate	Excluded Services Expiry Date	Date in which the Excluded Services Charges expires and is part of the standing data request	Date	10	ccyy-MM-dd
HeatingValueZone	Heating Value Zone	In relation to a supply point, the heating value zone	String	3	See *Retail Market Procedures* Appendix 1 'Coding of gas zones and gate points'
InitiatorReferenceNumber	RB Reference Number	A unique reference number assigned to individual work requests raised by the RB.	String	10	
InvestigationCode	Investigation Code	A code which the User pass the Network Operator as part of a Data change investigation	String	Enum	"High Account" "Customer Away" "Zero Consumption" "Customer Query" "Customer Read"
InvestigationDescription	Investigation Description	The free format field which the User can detail what is to be investigated in relation to a Data Change	String	100	

aseXML Element Name	Element Name	Description	Attributes /Format	Length/ Decimal Places	Allowed Values
JobCompletionCode1	Job Completion Code 1	Code that represent the work undertaken by the Network Operator.	String	Enum	For full usage details of Job Enquiry Codes and Job Completion Codes see Service Order Specifications in the Specification Pack.
JobCompletionCode2	Job Completion Code 2	Code that represent the work undertaken by the Network Operator.	String	Enum	For full usage details of Job Enquiry Codes and Job Completion Codes see Service Order Specifications in Specification Pack.
JobCompletionCode3	Job Completion Code 3	Code that represent the work undertaken by the Network Operator.	String	Enum	For full usage details of Job Enquiry Codes and Job Completion Codes see Service Order Specifications in the Specification Pack. Not used in WA
JobEnquiryCode	Job Enquiry Code	Code that describes the nature of the work. However receivers of the work will need to show the appropriate "Priority Code" as per industry A to K list.	String	Enum	For full usage details of Job Enquiry Codes and Job Completion Codes see Service Order Specifications in the Specification Pack.
JurisdictionCode	N/A	Mandatory element for MSATS use. Not used by Gas	String	3	"VGI" "SGI" "WGI"
LastModifiedDateTime	N/A	A timestamp that may be used by an application to determine whether the supplied data is the latest information	DateTime	25	ccyy-MM-ddThh:mm:ss+hh:mm (see 'time format' Section 4 – introduction.)
LifeSupportStatus	Life Support Status	The status of Life Support	String	Enum	Allowable Values: "Registered - No Medical Confirmation" "Registered - Medical Confirmation" "Deregistered - No Medical Confirmation" "Deregistered - Customer Advice" "Deregistered - No Customer Response" "None" 'None' means that the premises doesn't have a current Life Support requirement
LSContactName	Life Support Contact Name	Name of the Life Support Contact. Must be the name of the person who is the contact for the management of Life Support requirements. Passed in aseXML structured format			

aseXML Element Name	Element Name	Description	Attributes /Format	Length/ Decimal Places	Allowed Values
LSContactEmailAddress	Life Support Contact e-mail address	Must be the email address of the person who is the contact for the management of Life Support requirements where the initiator has obtained Explicit Informed Consent for the use of the email address.	String	100	Must be a valid email address format
LSEquipment	Life Support Equipment	Life Support Equipment at property	String	Enum	Allowable values: "Oxygen Concentrator" "Intermittent Peritoneal Dialysis Machine" "Kidney Dialysis Machine" "Chronic Positive Airways Pressure Respirator" "Crigler Najjar Syndrome Phototherapy Equipment" "Ventilator For Life Support" "Other" 'Other' means an equipment that a registered medical practitioner certifies is required for a person residing at the customer's premises for life support and is not already listed above
LSPhoneNumber1	Life Support Phone number 1	Must be the phone number of the person who is the contact for the management of Life Support requirements. Passed in aseXML structured format			
LSPhoneNumber2	Life Support Phone number 2	Must be the phone number of the person who is the contact for the management of Life Support requirements. Passed in aseXML structured format			
LSPostalAddress	Life Support Postal Address	Address in aseXML structured format (See Address elements) Must be the Customer's postal address for Life Support requirements.			
LoadDate	Load Date	The date the data was loaded into the Meter Register	DateTime	25	ccyy-MM-ddThh:mm:ss+hh:mm (see 'time format' Section 4 – introduction.)

aseXML Element Name	Element Name	Description	Attributes /Format	Length/ Decimal Places	Allowed Values
LoadDetails/PerAnnum	Load Details per Annum	The estimated load for a Supply Point per annum (consumption in MJ) that is expected to be used by the customer at this site which assists the Network Operator determining the infrastructure (such as service fitting line/meter capacity) to be installed.	Integer	10	
LoadDetails/PerHour	Load Details per Hour	The estimated load for a Supply Point per hour (consumption in MJ) that is expected to be used by the customer at this site that assists the Network Operator determining the infrastructure (such as service fitting line/meter capacity) to be installed.	Integer	6	
LifeSupportStatus	Life Support Status	The status of Life Support	String	Enum	Allowable Values: "Registered - No Medical Confirmation" "Registered - Medical Confirmation" "Deregistered - No Medical Confirmation" "Deregistered - Customer Advice" "Deregistered - No Customer Response" "None" 'None' means that the premises doesn't have a current Life Support requirement
Market	N/A	Indicates the energy market to which the aseXML message belongs.	String	10	SA – 'SAGAS' WA – 'WAGAS'
MelwayGridReference	Melway Grid Reference	Map reference that indicates were street is located in relation to the Melway Street Directory	String	9	
MeterInletPressure	Meter Inlet Pressure	Gas supply pressure to the inlet of the meter, measured in Kpa	Numeric	6,2	

aseXML Element Name	Element Name	Description	Attributes /Format	Length/ Decimal Places	Allowed Values
MeterPosition	Gas Meter Position	Position in relation to the location of the gas meter.	String	Enum	BA = Basement BG = Back Gate BH = Back of House BR = Bathroom BV = Back Verandah BW = Back Wall BY = Back Yard CE = Cellar CP = Cupboard DR = Dining Room FA = Factory FD = Front Door FF = Front Fence FH = Front House FL = Front Left Side FR = Front Right Side FS = Front Wall Shop FV = Front Verandah FW = Front Wall GA = Garage GR = Group of Meters KC = Kitchen Cupboard KI = Kitchen LS = Left Side OB = Over Back Door PA = Passage PO = Porch PY = Pantry RS = Right Side SH = Shed SK = Under Sink SP = Shop SR = Store Room TO = Toilet UB = Under Back House UC = Under Counter UF = Under Front House UL = Under Left Side UP = Upstairs UR = Under Right Side US = Under Stairs WH = Wash House

aseXML Element Name	Element Name	Description	Attributes /Format	Length/ Decimal Places	Allowed Values
MeterReadFrequency	Meter Read Frequency	Frequency on which the meter is read	String	Enum	"Bi Monthly" "Monthly" "Quarterly"
MeterSerialNumber	Gas Meter Number	Number located on the gas meter.	String	12	
MeterStatus	Meter Status	Field that confirms if a disconnection has taken place. Meter Disconnection by User notification to Network Operator.	String	Enum	"Turned on" "Turned off" "Plugged' "No meter" Not used in WA Market
MeterTypeSizeCode	Meter Type Size Code	Identifies type of meter	String	3	In WA: Digit 1 = Meter Type 'B' or 'I' Digit 2 = Index Type 'M' or "I" Digit 3 = Number of Dials (1 to 7) In SA: Network Operator defined.

aseXML Element Name	Element Name	Description	Attributes /Format	Length/ Decimal Places	Allowed Values
MIRNStatus	MIRN Status	The definitions of MIRN Status are contained in the *Retail Market Procedures*. These definitions (with some additional notes for clarification) are as follows: Commissioned" - Delivery Point has been commissioned by Network Operator and gas is able to flow (note - the meter is turned on, however the consumer's installation may not be commissioned or able to receive gas). "Decommissioned" - The Delivery point has been disconnected (i.e. gas is unable to flow). Examples (which vary by jurisdiction according to work practices) could be that the meter has been removed, turned off, plugged, locked or wadded. "Deregistered" - The Delivery Point has been permanently removed. "Registered" - Initial installation of upstand with no meter (This is only used in SA - this is not advised to AEMO).	String	Enum	"Registered" - (This is only used in SA – and is not advised to AEMO) "Commissioned" "Decommissioned" "Deregistered"
New/ MeterRead/ Current/ IndexValue	New Index Value	The New Meter Reading index that will be processed to calculate the Energy Flow.	Integer	7	
New/ MeterSerialNumber	New Gas Meter Number	In relation to a Meter Change the new Meter Number.	String	12	
New/ MeterTypeSizeCode	New Meter Type Size Code	In relation to a upgrade meter size transaction identifies type of meter of the new meter	String	3	IN WA Digit 1 = Meter Type 'B' or 'I' Digit 2 = Index Type 'M' or "I" Digit 3 = Number of Dials (1 to 7) IN SA Network Operator defined.

aseXML Element Name	Element Name	Description	Attributes /Format	Length/ Decimal Places	Allowed Values
New/ PressureCorrectionFactor	New Pressure Correction Factor	In relation to an upgrade meter size transaction the Pressure Correction Factor applied to calculate gas flow for the new meter.	Numeric	6,4	
NextAvailableReadDate	Next Available Special Read Date	Date the Network Operator assigns when the reading can next be booked	Date	10	ccyy-MM-dd
NextScheduledReadDate	Next Scheduled Read Date	According to the Meter Reading Schedule the next date on which the Meter is planned to be read.	Date	10	ccyy-MM-dd
NextScheduledSpecialRead/ Preferred/ Date	Appointment Date	For GasStandingData indicates a Special Read booking that could be used as a Customer Transfer Date.	Date	10	ccyy-MM-dd
NMI	MIRN	Meter Installation Registration Number. Unique number allocated by the Network Operator that identifies the Supply Point.	String	10	
NMIWithChecksum	MIRN	Meter Installation Registration Number. Unique number allocated by the Network Operator that identifies the Supply Point.	String	10	
NotificationData/SpecialNotes/CommentLine	SORD Not Complete Comment	Required if Service Order is attempted but not successfully completed, including when cancelled by the DB For the avoidance of doubt, not required for retailer initiated B2B cancellation transaction unless:.. Retailer Cancel SO was rejected by the DB but later cancelled in the field SO cancellation was verbally communicated by the Retailer. Up to 3 comment lines can be provided (80 characters each) Note: Participants will refer to this field as SORDNotCompleteComment/CommentLine	String	80	
PlumberLicenceNumber	Plumber Licence Number	Plumbers Licence Number which is required as part of a Meter Fix process	String	5	

aseXML Element Name	Element Name	Description	Attributes /Format	Length/ Decimal Places	Allowed Values
PreferredContactMethod	Preferred Contact Method	Preferred Contact Method	String	Enum	Allowable values: "Postal Address" "Site Address" "Email Adress" "Phone"
PressureCorrectionFactor	Pressure Correction Factor	Pressure Correction Factor applied to calculate gas flow.	Numeric	6,4	
ProposedRead/ IndexValue	Proposed Index Value	Meter Reading index proposed by a User in the MeterDataVerification process	Integer	7	
ProposedRead/ ReadDate	Proposed Read Date	Date of proposed read	Date	10	ccyy-MM-dd

aseXML Element Name	Element Name	Description	Attributes /Format	Length/ Decimal Places	Allowed Values
Reason	Reason	Reason why Life Support information has been provided. Used in LifeSupportNotification and LifeSupportRequest transations. Notes regarding the allowed values for LifeSupportRequest. • "Confirm Life Support" means the Retailer or Distributor requires confirmation of whether the Connection Point has a Life Support requirement or not. • "Data Quality Issue" means that although the data may be technically correct, it may not be fit for purpose (e.g. phone number is 9999999). The Retailer or Distributor must provide which specific data they are querying in the SpecialNotes field. • "No response to rejected LSN" means that a Retailer or Distributor has rejected a previous LSN where it was reasonably expected the Retailer or Distributor would send through a new LSN with updated/corrected information, which has not yet been received. "Other" must only be used for scenarios not covered by the specified allowed values. The Retailer or Distributor must provide the details of the reason in the SpecialNotes field.	String	Enum	Allowable values for LifeSupportNotification transaction are: "Update" "Reconciliation" Allowable values for LifeSupportRequest transactions are: "Confirm Life Support" "Data Quality Issue" "No response to rejected LSN" "Other"

aseXML Element Name	Element Name	Description	Attributes /Format	Length/ Decimal Places	Allowed Values
ReasonForNoAccess	Reason for No Access by Meter Reader	Reason why access to meter was not available.	String	Enum	"Meter Removed" "Meter Obstructed" "Dirty Dial" "Can't Locate Meter" "Gate Locked" "Savage Dog" "Meter Changed" "Refused Access" "Locked and No Answer" "Damaged Meter" "Dial Out of Alignment" "Key Required" "Access Overgrown" "Other"
RecordCount	N/A	Specifies the number of records contained in a populated CSV element	Integer	10	
RegistrationOwner	Registration Owner	Registration Owner for Life Support	String	Enum	"YES" "NO"
Removed/ MeterData/ Current/ IndexValue	Old Gas Meter Index Value	The Index Value which was read from the old meter in relation to a meter change	Integer	7	
Removed/ MeterSerialNumber	Old Gas Meter Number	The old gas meter number which pertains to a meter change	String	12	
responseType	N/A	Used by aseXML to identify the context of the ServiceOrderResponse	String	Enum	"Initial" "Closure" Note: Implemented as an attribute of "ServiceOrderResponse" element in aseXML schema
RevisedRead/ ReadDate	Revised Index Date	In relation to a Data Change, the date pertaining to the revised index value	Date	10	ccyy-MM-dd
RevisedRead/ IndexValue	Revised Index Value	In relation to a Data Change it is the revised index value the Network Operator sends to User	Integer	7	

aseXML Element Name	Element Name	Description	Attributes /Format	Length/ Decimal Places	Allowed Values
ScheduledReadingDayNumber	Scheduled Reading Day Number	In relation to a Meter Reading Route Schedule change the day number on which the meter will be read.	String	2	
ServiceOrderNumber	RB Reference Number	A unique reference number assigned to individual work requests raised by the RB.	String	10	For User-generated Service Orders, the Service Order Number is a reference number generated by a User. For an implied service order, the Service Order Number will always equal the transfer request ID allocated by AEMO.
ServiceProviderReference	Work Request Number	Unique reference number which the Network Operator assigns to the work for tracking and auditing purposes.	String	15	
SiteAddress	Address	Supply Point address in aseXML structured format (See Address elements)			
SORDSpecialComments/CommentLine	Special Job Instructions	Additional information to assist field staff to complete the job	String	160	Note: Implemented as two 80 character elements in the aseXML schema
SpecialNotes	Special Notes	Any additional information the Initiator wishes to convey to the Recipient. Used in LifeSupportNotification and LifeSupportRequest transations	String	240	
SpecialReadReasonCode	Reason for Special Read	What type of Special Read is to be performed.	String	Enum	"Final Read" (SRF) "Check Read" (SRR) "Account Investigation" (SRA) "Final Read for Disconnection on Non-Payment" (SRD) "Change of Retailer" (SRT) Note: Code equivalent in brackets
StartWorkNoticeNumber	Start Work Notice Number	In Mildura, the number which appears on a Start Work Notice issue by the Network Operator for a "B" Type Office of Gas Safety records. In WA, the authorisation number of the Gas Fitter responsible for the type B appliance specifications.	String	6	

aseXML Element Name	Element Name	Description	Attributes /Format	Length/ Decimal Places	Allowed Values
SupplyPointCode	Supply Point Code	Identifies whether the supply point is distribution or transmission and whether it has a basic or interval meter installed.	String	Enum	"Basic" "Interval" "Transmission"
TimeServiceOrderCompleted	Time Service Order Completed	The time in which the service request was completed	Time	14	hh:mm:ss+hh:mm (see 'time format' Section 4 – introduction.)
TransmissionZone	Transmission Zone	A code that defines a Transmission zone	Integer	2	See *Retail Market Procedures* Appendix 1 'Coding of gas zones and gate points'
TypeOfRead	Type of Read	Indicator identifying the type of reading that has taken place.	String	Enum	"Actual" "Deemed" "Estimated" "Substituted" "Customer Own Read" (Used only in SA in 'Disconnection Read transaction).

CSV Data Elements[21]

The table below specifies the column designators for CSV data elements that are carried inside of some of aseXML transactions. Note, the order of CSV column designators is fixed and is as per definition of CSV files given by this document. In general, date/time and time elements in the body of **CSV** B2B transactions will be expressed with a Time Zone Designator (TZD). The time zone selected will be at the discretion of the sending party. The 'Planned Outage Time' is always in local time without a Time Zone Designator.

CSV Element Name	Element Name	Description	Attributes /Format	Logical Length/ Decimal Length	Allowed Values
Access_Details	Access Details		String	40	
Actual_Change_Date	Actual Transfer Date	Date on which the Customer Transfer is required	Date	10	ccyy-mm-dd
Actual_End_Date	Registration End Date	In relation to a transfer request which nominates a retrospective transfer date as the proposed transfer date.	Date	10	ccyy-mm-dd
Address_Change_Effective_Date	Address Change Effective Date	Date on which the Address information change is to commence	Date	10	ccyy-MM-dd
Adjustment_Indicator	Adjustment Indicator	Indicates the type of adjustment	String	1	"C" = Cancelled Transaction "R" = Rebilled Transaction "N" = New Transaction
Adjustment_Reason_Code	Adjustment Reason code	A code that the Network Operator provides to the User which identifies the reason for the revised reading	String	2	"UR" = Under Read "OR" = Over Read "UE" = Under Estimated "OE" = Over Estimated "NC" = No Change
After_Hours_Ind	After Hours Ind	Specifying whether the job occurred within normal or after hours.	String	1	"0" = Normal Hours "1" = After Hours "2" = Not Known
Agreed_Amount_GST_Excl	Agreed Amount GST Exclusive	The agreed amount (exclusive of GST) which reflects the outcome of the dispute resolution process. It may be a new amount or the original amount.	Numeric	11,2	

CSV Element Name	Element Name	Description	Attributes /Format	Logical Length/ Decimal Length	Allowed Values
Agreed_Amount_GST_Incl	Agreed Amount GST Inclusive	The agreed amount (inclusive of GST) which reflects the outcome of the dispute resolution process. It may be a new amount or the original amount.	Numeric	11,2	
Agreed_GST_Amount	Agreed GST Amount	The agreed GST amount which reflects the outcome of the dispute resolution process. It may be a new amount or the original amount.	Numeric	11,2	
Average_Heating_Value	Average Heating Value	Is the sum of the Daily Weighted Flow Heating Value divided by the number of days for the reading/billing.	Numeric	4,2	
Baseload	Base Load	Non weather sensitive Gas usage per day (MJ)	Numeric	9,1	
Begin_Date	Begin Date	Commencement date for an energy history request	Date	10	ccyy-MM-dd
Billing_Days	Billing Days	In relation to tariff "V" DUoS charges, the number of days in the bill period — calculated as the difference between the ReadFrom and ReadTo dates.	Numeric	3,0	
bl	Base Load	Non weather sensitive Gas usage per day (MJ)	Numeric	9,1	
Building_Or_Property_Name_1 Building_Or_Property_Name_2	Building Or Property Name (Address Elements)	Defines the building or property name as per Australian Standard AS4590	String	30	Note: Building_Or_Property_Name_2 is not used in WA.
Business_Name	Business Name	Contains company or business name, required if Person_Name_Family is not populated	String	60	
Capacity	Capacity		String	4	In cubic meters
Capacity_Group	Capacity Group		String	2	"10" = up to and including 6cm "20" = 7cm to 49cm "30" = 50cm and above "40" = Prepaid meters “50” = Hot Water
Change_Id	Change Request ID	Unique identifier assigned to each transfer request by CATS	Integer	10	1-9999999999

CSV Element Name	Element Name	Description	Attributes /Format	Logical Length/ Decimal Length	Allowed Values
Change_Reason_Code	Change Reason Code	Identifies the type of transfer request	String	4	0001 = Prospective transfer, in-situ 0002 = Prospective transfer, move in 0003 = Correction of Transfer
Change_Status	Change Status Code	Describes the status of a transfer request within CATS	String	4	"REQ" = Requested
Charge_TP	Charge TP (DUoS This Period)	In relation to tariff "D" DUoS charges, the charge for the period	Numeric	11,2	
Completion_Code	Completion Code	Type of completion	String	1	"0" = Incomplete "1" = Complete "2" = Partial
Communication_Equipment_Present	Communication Equipment Present		Alpha	1	"Y" = Communications Equipmement "N" = No
Consumed_Energy	Consumed Energy	Energy calculated (eg - Energy Flow)	Numeric	11,0	Megajoules
ContactDetail_PersonName	Contact Detail Person Name	Contains contact's mailing name or company name	String	60	
ContactDetail_PhoneNumber_1	Contact Detail Phone Number 1	Contains contact's primary phone number	String	15	
ContactDetail_PhoneNumber_2	Contact Detail Phone Number 2	Contains contact's secondary phone number	String	15	
Consumption_GJ	Consumption (GJ)	In relation to tariff "D" DUoS charges, the actual GJ recorded by the data logger/meter and any substituted GJ	Numeric	11,3	
Consumption_MJ	Consumed Energy (Megajoules)	Energy calculated (eg - Energy Flow)	Numeric	11,0	
Consumption_HR1		Energy Consumption for the Hour	Numeric	10	In MJ
Consumption_HR2		Energy Consumption for the Hour	Numeric	10	In MJ
Consumption_HR3		Energy Consumption for the Hour	Numeric	10	In MJ
Consumption_HR4		Energy Consumption for the Hour	Numeric	10	In MJ
Consumption_HR5		Energy Consumption for the Hour	Numeric	10	In MJ
Consumption_HR6		Energy Consumption for the Hour	Numeric	10	In MJ
Consumption_HR7		Energy Consumption for the Hour	Numeric	10	In MJ
Consumption_HR8		Energy Consumption for the Hour	Numeric	10	In MJ
Consumption_HR9		Energy Consumption for the Hour	Numeric	10	In MJ
Consumption_HR10		Energy Consumption for the Hour	Numeric	10	In MJ
Consumption_HR11		Energy Consumption for the Hour	Numeric	10	In MJ

CSV Element Name	Element Name	Description	Attributes /Format	Logical Length/ Decimal Length	Allowed Values
Consumption_HR12		Energy Consumption for the Hour	Numeric	10	In MJ
Consumption_HR13		Energy Consumption for the Hour	Numeric	10	In MJ
Consumption_HR14		Energy Consumption for the Hour	Numeric	10	In MJ
Consumption_HR15		Energy Consumption for the Hour	Numeric	10	In MJ
Consumption_HR16		Energy Consumption for the Hour	Numeric	10	In MJ
Consumption_HR17		Energy Consumption for the Hour	Numeric	10	In MJ
Consumption_HR18		Energy Consumption for the Hour	Numeric	10	In MJ
Consumption_HR19		Energy Consumption for the Hour	Numeric	10	In MJ
Consumption_HR20		Energy Consumption for the Hour	Numeric	10	In MJ
Consumption_HR21		Energy Consumption for the Hour	Numeric	10	In MJ
Consumption_HR22		Energy Consumption for the Hour	Numeric	10	In MJ
Consumption_HR23		Energy Consumption for the Hour	Numeric	10	In MJ
Consumption_HR24		Energy Consumption for the Hour	Numeric	10	In MJ
Current_Index_Value	Current Index Value	Most recent validated meter index stored on the database.	Numeric	7,0	
Current_Read_Date	Current Read Date	The date on which the Current Index Value was read.	Date	10	ccyy-MM-dd For interval meters, Current_Read_Date is the date of the gas day to which the read applies
Customer_Identification	Customer Identification		Char	12	Any valid driver's license number
Customer_Characterisation	Customer Characterisation	In relation to a customer, whether the customer is metropolitan or non-metropolitan and business or residential.	String	2	"MB" = Metro Business "MR" = Metro Residential "NB" = Non Metro Business "NR" = Non Metro Residential
Customer_Classification_Code	Customer Classification Code	In relation to a customer, whether the customer is residential or business, as per the NERL obligation	String	20	"RES" = Residential Customer "BUS" = Business Customer
Customer_Threshold_Code	Customer Threshold Code	In relation to a business customer, type of classification is based on consumption thresholds, as per the NERL obligation.	String	20	"LOW" = Business Customer with consumption from 0GJ up to 999GJ "HIGH" = Business Customer with consumption of 1000GJ or more.
Date_Of_Birth	Date Of Birth		Date	10	ccyy-MM-dd

CSV Element Name	Element Name	Description	Attributes /Format	Logical Length/ Decimal Length	Allowed Values
DateServiceOrderCompleted	Date Service Request Completed	Date on which the Service requested was completed.	Date	10	ccyy-mm-dd
Daily_Heating_Value	Daily Heating Value		Numeric	5,3	
Date_of_Future_Read_N	Date of Future Read N		Date	10	ccyy-MM-dd Note, suffix "N" must be replaced with the future date ordinal
Delivery_Point_Identifier	Site Address DPID	Defines the delivery point identifier as per Australian Standard AS4590	String	8	
Disputed_Amount_GST_Excl	Disputed Amount GST Exclusive	The Disputed_Amount_GST_Excl is the amount of the original transaction. (NetworkDUoSBillingNotification)	Numeric	11,2	
Disputed_Amount_GST_Incl	Disputed Amount GST Inclusive	The Disputed_Amount_GST_Incl is the amount of the original transaction. (NetworkDUoSBillingNotification)	Numeric	11,2	
Disputed_GST_Amount	Disputed GST Amount	The Disputed_GST_Amount is the amount of the original transaction. (NetworkDUoSBillingNotification)	Numeric	11,2	

Dispute_Reason_Code	Dispute Reason Code	Applicable Dispute Reason Code	String	4	"NNMI" = MIRN not known to User (i.e. User does not supply customer). "BPDF" = Billing Period Different "FC1" = Fixed Charge item 1 different (WA only) "FC2" = Fixed Charge item 2 different (WA only) "FC3" = Fixed Charge item 3 different (WA only) "FC4" = Fixed Charge item 4 different (WA only) "VC1" = Variable Charge item 1 different (WA only) "VC2" = Variable Charge item 2 different (WA only) "VC3" = Variable Charge item 3 different (WA only) "VC4" = Variable Charge item 4 different (WA only) "LRTB" = User has lost customer to another User before the invoiced period. "LRTD" = User lost customer to another User during the invoiced period (therefore need to apportion network charge between old and new User). "NDFG" = Network tariff different – generic "NDFO" = Network tariff charge different – Off Peak "NFP" = Network tariff charge different – Peak "QDFG" = Consumption different – generic "DUPL" = Duplicate charge (bill period) "ESDF" = Excluded service charge different "ESDP" = Excluded service code disputed (Excluded Service Code does not match SO type) "OTHR" = Other charge "BDDF" = Bill days different "FCDF" = Fixed charge different "TOTD" = Total charge different "MDQ" = MDQ is different "MHQY" = Actual MHQ this year different "MHQT" = Actual MHQ this period different "MHQE" = Expected MHQ this year different "RDFG" = Rate is different "URSO" = Unknown User Service Order (User does not believe this amount should be charged at all)
Dispute_Comment	Dispute Reason Comment, Dispute_Resolution Comment	Free text field to provide additional explanation for the dispute.	String	240	

CSV Element Name	Element Name	Description	Attributes /Format	Logical Length/ Decimal Length	Allowed Values
Distributor_ID	Distributor Id	Code identifying a Network Operator	String	10	The GBO ID of the Network Operator. Note, only codes identifying Network Operators can be used for this element.
Distribution_Tariff	Distribution Tariff	Part of the request for standing data from the Network Operator	String	Enum	See allowed enumerations in aseXML element.
Duration_Of_Outage	Duration of Outage	Approximate number of hours for the planned outage	Time	8	hh:mm:ss
End_Date	End Date	End date for an energy history request	Date	10	ccyy-MM-dd
Energy_Calculation_Date_Stamp	Energy Calculation Date Stamp	The date in which the Network Operator calculated the energy	Date	10	ccyy-MM-dd
Energy_Calculation_Time_Stamp	Energy Calculation Time Stamp	The time in which the Network Operator calculated the energy	Time	8	hh:mm:ss
Estimation_Substitution_Reason_Code	Estimation/Substitution Reason Code	Code that identifies why the Energy Flow was estimated/substituted	String	2	“01” = Meter Removed “02” = Meter Obstructed “03” = Dirty Dial “04” = Can't Locate Meter “05” = Gate Locked “06” = Savage Dog “07” = Meter Changed “08” = Refused Access “09” = Locked & No Answer “00” = Other "10" = Delayed Read “11” = Adjustment Read “12” = Damaged Meter “13” = Dial out of Alignment “14” = Key Required “15” = Access Overgrown "16" = Hi/Low Failure "17" = Meter Capacity Failure

CSV Element Name	Element Name	Description	Attributes /Format	Logical Length/ Decimal Length	Allowed Values
Estimation_Substitution_Type	Estimation/Substitution Type	Indicator identifying the type of estimation/substitution applied.	String	2	"E1" = Estimation method 1 "E2" = Estimation method 2 "E3" = RB/DB agreed value "S1" = Substitution method 1 "S2" = Substitution method 2 "S3" = RB/DB agreed substituted value In SA: - "E1/S1" = Type 1 estimation/substitution method in the ESCOSA Metering Code (a calculation based on Same Time Last Year) - "E2/S2" value for Estimation_Substitution_Type means Type 3 estimation/substitution method in the ESCOSA Metering Code (a calculation based on customer class) - "E3/S3" value for Estimation_Substitution_Type means Type 4 estimation/substitution method in the ESCOSA Metering Code (a substitution method only and is a value agreed by RB and DB).
Expected_MHQ	Expected MHQ	Victoria - In relation to tariff "D" DUoS charges, the highest Maximum Hour Quantity expected in the calendar year. In SA, this data element will contain the Contracted MDQ	Numeric	12,0 (SA is different from Vic (Vic - 9,4)	Megajoules
Excluded_Service_Charge	Excluded Service Charge (GST exclusive)	Calculated excluded service charge, excluding GST	Numeric	11,2	

CSV Element Name	Element Name	Description	Attributes /Format	Logical Length/ Decimal Length	Allowed Values
Excluded_Services_Charges_Charge_Item_Category	Excluded Services Charges Charge Item Category	Charge category of an excluded services	String	7	"Service" "Meter" "Logger" "O+M" "Mains" "Other"
Excluded_Services_Charges_Charge_Item_Amount	Excluded Services Charges Charge Item Amount	Excluded Services Charges that may apply in relation to a supply point and is part of the standing data request.	Numeric	9,2	
Excluded_Services_Charges_Charge_Item_Expiry_Date	Excluded Services Charges Charge Item Expiry Date	Date in which the Excluded Services Charges expires and is part of the standing data request	Date	10	ccyy-MM-dd
Excluded_Services_Code	Excluded Services Code	Based on each Network Operator's codes, used to indicate type of service.	String	10	
Fixed_Charge	Fixed Charge	In relation to tariff "V" DUoS charges, the daily fixed charge multiplied by the number of days in the billing period.	Numeric	11,2	
Fixed_Charge_1	Fixed Charge 1	In relation to tariff "H" Duos charges, the fixed charge used for *Standing Charges*. Exclusive of GST	Numeric	11,2	
Fixed_Charge_2	Fixed Charge 2	In relation to tariff "H" Duos charges, the fixed charge used for *User Specific Charges*. Exclusive of GST	Numeric	11,2	
Fixed_Charge_3	Fixed Charge 3	In relation to tariff "H" Duos charges, the fixed charge used for *Demand Charges*. Exclusive of GST	Numeric	11,2	
Fixed_Charge_4	Fixed Charge 4	In relation to tariff "H" Duos charges, the fixed charge used for *Other* fixed charges. Exclusive of GST	Numeric	11,2	
Flat_Or_Unit_Number	Flat Or Unit Number (Address Elements)	Defines the flat or unit number as per Australian Standard AS4590	String	7	
Flat_Or_Unit_Type	Flat Or Unit Type (Address Elements)	Defines the type of flat or unit as per Australian Standard AS4590	String	4	See aseXML data element address

CSV Element Name	Element Name	Description	Attributes /Format	Logical Length/ Decimal Length	Allowed Values
Floor_Or_Level_Number	Floor Or Level Number (Address Elements)	Defines the floor or level number as per Australian Standard AS4590	String	5	
Floor_Or_Level_Type	Floor Or Level Type (Address Elements)	Defines the floor or level type as per Australian Standard AS4590	String	2	See aseXML data element address
frb	Failed Retail Business	This is the failed retailer in a RoLR event	Varchar	10	
From_Date	From Date		Date	10	ccyy-MM-dd
Full_History_Required	Full History Required	In Energy History Request shows if the full history is required	String	1	"Y" = Yes "N" = No
Gas_Meter_Number	Gas Meter Number	Number located on the gas meter.	String	12	
Gas_Meter_Units	Gas Meter Units	Identifies the unit of measure that pertains to the gas meter	String	1	"I" = Imperial "M" = Metric
GST_Exclusive_Amount_Paid	GST_Exclusive_Amount_Paid	Amount paid (exclusive of GST)	Numeric	11,2	
GST_Inclusive_Amount_Paid	GST Inclusive Amount Paid	Amount paid (inclusive of GST)	Numeric	11,2	
GST_Amount	GST Amount	GST applicable to calculated excluded service charge or GST amount applicable to transaction	Numeric	11,2	
Heating_Value_Zone	Heating Value Zone		String	3	
High_Meter_Range			String	12	
Hi_Low_Failure	Hi/Low Failure	A code that indicates whether the meter reader has input a meter reading that was outside the predetermined tolerance range	String	1	"Y" = Yes "N" = No
House_Number_1 House_Number_2	House Number (Address Elements)	Defines the house number as per Australian Standard AS4590	String	5	Note: House_Number_2 is not used in WA.
House_Number_Suffix_1 House_Number_Suffix_2	House Number Suffix (Address Elements)	Defines the house number suffix as per Australian Standard AS4590	String	1	Note: House_Number_Suffix_2 is not used in WA.
Invoice_Number	Invoice Number	Invoice number the line relates to.	String	20	
Job_Enquiry_Code	Job Enquiry Code		Alpha	4	
Last_Modified_Date_Time	N/A	A timestamp that may be used by an application to determine whether the supplied data is the latest information	DateTime	25	ccyy-MM-ddThh:mm:ss+hh:mm

CSV Element Name	Element Name	Description	Attributes /Format	Logical Length/ Decimal Length	Allowed Values
Last_Read_Date	Last Read Date	Date to which a User has recorded energy on this supply point	Date	10	ccyy-MM-dd
Line_Description	Line Description	Line description that contains details of charge.	String	80	
Local_Capacity_Expiry_Date	Local Capacity Expiry Date	Date that the Local Capacity Charge will expire is part of the standing data request	Date	10	ccyy-MM-dd
Location_Description	Location Descriptor (Address Elements)	Defines the location descriptor as per Australian Standard AS4590. This is a catch all field for non-standard address information	String	30	
Lot_Number	Lot Number (Address Elements)	Defines the lot number as per Australian Standard AS4590	String	6	
Low_Meter_Range			String	12	
Mail_Address_Line_1	Mail Address Line 1	Contains formatted postal address details	String	80	
Mail_Address_Line_2	Mail Address Line 2	Contains formatted postal address details	String	80	
Mail_Address_Line_3	Mail Address Line 3	Contains formatted postal address details	String	80	
Max_MHQTP	Max MHQTP (This Period)	In relation to tariff "D" DUoS charges, the highest actual Maximum Hour Quantity recorded in this period (month).	Numeric	12,0(SA/ WA is different from Vic (Vic - 9,4)	Megajoules/hr
Max_MHQTY	Max MHQTY (This Year)	In relation to tariff "D" DUoS charges, the highest actual Maximum Hour Quantity recorded for the year to date.	Numeric	12,0(SA/ WA is different from Vic (Vic - 9,4)	Megajoules/hr
Melway_Grid_Reference	Melway Grid Reference		String	9	

CSV Element Name	Element Name	Description	Attributes /Format	Logical Length/ Decimal Length	Allowed Values
Meter_Attachments			String	3	"HEX" = hexagram (hardwired remote meter reading system). "DIA" = dialog attachment for remote meter reading. "RAD" =radio remote meter reading attachment. "SMC" =smartcard prepayment meter attachment. "TEL" = telemetry attachment for remote meter reading
Meter_Capacity_Failure	Meter Capacity Failure	A code that indicates whether the reading was outside the predetermined tolerance range	String	1	"Y" = Yes "N" = No
Meter_Description			String	14	
Meter_Serial_Number	Meter Serial Number		String	20	
Meter_Position	Meter Position		String	40	
Meter_Read_Frequency	Meter Read Frequency	In the Annual Meter Reading Schedule indicates how frequently the meter is read	String	1	"B" = Bi-Monthly "M" = Monthly "Q" = Quarterly
Meter_Status	Meter Status	Field that confirms if a disconnection has taken place. Meter Disconnection by User notification to Network Operator.	String	10	"Turned on" "Turned off" "Plugged" = Meter is disconnected "No meter" If this Meter_Status is mandatory in a transaction, then it will always be "Turned On" in WA as metere status has no meaning in WA.
Meter_Type_Size_Code	Meter_Type_Size_Code	Identifies type of meter	String	3	In WA: Digit 1 = Meter Type 'B' or 'I' Digit 2 = Index Type 'M' or "I" Digit 3 = Number of Dials (1 to 7) In SA: Network Operator defined.

CSV Element Name	Element Name	Description	Attributes /Format	Logical Length/ Decimal Length	Allowed Values
Metric_Imperial_Indicator			String	1	"I" = Imperial "M" = Metric
MIRN_Status	MIRN Status		Alpha	20	"Register" = upstand + no meter "Commissioned" = upstand + meter connected "Decommissioned" = upstand + meter disconnected/turned off "Deregistered" = all removed
Movement_Type	Movement Type	A code that indicates the customer details update status: "MI" = Move In "MO" = Move Out "UP" = Update	String	2	"MI" = Move In "MO" = Move Out "UP" = Update
Network_Id	Sub Network ID	Sub-network Id – Unique identification of a sub-network	Char	4	As defined in Appendix A.5 of the ICD.

CSV Element Name	Element Name	Description	Attributes /Format	Logical Length/ Decimal Length	Allowed Values
Network_Tariff_Code	Network Tariff Code	A description of the Network's Tariff (as gazetted by the Regulator). Tariff may be for standing charges, demand, etc. In SA, mostly the same as Distribution_Tariff (aseXML element) – see allowed values. In WA, the 4 digit distribution tariff defined in the RMP with a 6 digit extension making the haulage charges specific for the MIRN	String	10	In SA: 1Demand 2Demand 3Demand 4Demand 5Demand 6Demand 7Demand 8Demand 9Demand 0Demand Commercial Volume Negotiated NegVolume (note this is equivalent to 'NegotiatedVolume' in the Distribution_Tariff aseXML element) In SA, 'Negotiated' is used for both Negotiated Service charges and Term Sheet charges.
New_Fro	Party	Contains the initiator of the CATS change request, only when sent to the New User and the Network Operator	String	10	As defined in the GBO ID Table, as published on the AEMO website.
Next_Scheduled_Read_Date	Next Scheduled Read Date	According to the Meter Reading Schedule the next date on which the Meter is planned to be read.	Date	10	ccyy-MM-dd
Next_Scheduled_Special_Read_Date	Next Scheduled Read Date		Date	10	ccyy-MM-dd
NMI	MIRN	Meter Installation Registration Number. Unique number allocated by the Network Operator that identifies the Supply Point.	String	10	
NMI_Checksum	MIRN Checksum	Is a number calculated by an algorithm for validation purposes	Integer	1	
Number_of_Meter_Dials			String	2	

CSV Element Name	Element Name	Description	Attributes /Format	Logical Length/ Decimal Length	Allowed Values
Old_Transaction_ID	Old Transaction ID	A reference to a previous transaction where the current transaction reverses an old transaction.	String	17	
Old_Invoice_Number	Old Invoice Number	A reference to a previous invoice for a reversal transaction.	String	20	
Paid_Date	Paid Date	Payment Date	Date	10	ccyy-MM-dd
Party	Party	A code that identifies who the current Retailer is in relation to the Distributors Meter Register	String	10	As defined in the GBO ID Table, as published on the AEMO website.
Peak_Rate	Peak Rate	The peak flow rate during the day (WA only)	Numeric	10	in MJ/h
Pensioner_Or_Healthcare_CardNumber	Pension Or Healthcare CardNumber		String	10	Numeric and one alpha unique identifier as issued by the Dept. of Social Security or Veterans' Affairs
Period	Period	Victoria - In relation to DUoS network charges, the month in which this charge has been raised SA/WA This is the period (month) to which the charges relate (the consumption period). If the consumption period covers more than one month, then the last month of that consumption period is entered.	String	6	ccyyMM
Person_Name_Title	Person Name Title	Contains customer's title	String	12	
Person_Name_Given	Person Name Given	Contains customer's first name	String	40	
Person_Name_Family	Person Name Family	Contains customer's surname, require if Business_Name is not populate	String	40	
Planned_Outage_Commencement_Date	Planned Outage Commencement Date	In relation to a outage the date on which the outage is to occur.	Date	10	ccyy-MM-dd
Planned_Outage_Commencement_Time	Planned Outage Commencement Time	In relation to a outage the time on which the outage is scheduled to begin.	String	40	This can read time or time range e.g. business hours
Planned_Outage_Completion_Date	Planned Outage Completion Date	In relation to a planned outage the date on which the outage is to occur.	Date	10	ccyy-MM-dd
Postcode	Site Address Postcode (Address Elements)	Defines the postcode as per Australian Standard AS4590	String	4	

CSV Element Name	Element Name	Description	Attributes /Format	Logical Length/ Decimal Length	Allowed Values
Pressure_Correction_Factor	Pressure Correction Factor	Pressure Correction Factor applied to calculate gas flow.	Numeric	6,4	
Previous_Index_Value	Previous Index Value	The reading prior to the current index value stored on the database.	Numeric	7,0	
Previous_Read_Date	Previous Read Date	The date on which the Previous Index Value was read.	Date	10	ccyy-MM-dd For interval meters, Previous_Read_Date is the date of the gas day prior to the day to which the read applies.
Proposed_Meter_Change_End_Date	Proposed Meter Change End Date	The end date the Network Operator may perform the Meter Change as part of the Time Expired Meter Change program.	Date		ccyy-MM-dd
Proposed_Meter_Change_Start_Date	Proposed Meter Change Start Date	The start date the Network Operator may perform the Meter Change as part of the Time Expired Meter Change program.	Date		ccyy-MM-dd
Quantity	Quantity	Number of charges (e.g. multiple truck visits)	Numeric	5,0	
Rate	Rate	The Rate of the Excluded Service Charge	Numeric	11,2	
RB_Reference_Number	RB Reference Number	A unique reference number assigned to individual work requests raised by the RB.	String	10	
RDM	RDM (Reading Days this month)	In relation to tariff "D" DUoS charges, the number of reading days in the period (month).	Numeric	3,0	
RDY	RDY (Reading Days in the Year)	In relation to tariff "D" DUoS, the number of reading days for the year (365 or 366).	Numeric	3,0	
Reading_Day_Change_Effective_Date	Reading Day Change Effective Date	The date in which the new Schedule is effective from	Date	10	ccyy-MM-dd

CSV Element Name	Element Name	Description	Attributes /Format	Logical Length/ Decimal Length	Allowed Values
Reason_for_Read	Meter Read Reason Code	What type of Special Read is to be performed.	String	3	"SRF" = Special Final Read, "SRR" = Special Reference Read, "SRA" = Special Account Investigation, "SRD" = Special Disconnection "SRT" = Special Transfer Read "SCH" = Schedule Cycle Read "INI" = Meter Installation Read "REM" = Meter Remove "OSO" = Other Service Order "MDV" = Meter Data Verify (residual) For details of usage of Reason_for_Read, see Job Enquiry Code matrix in the Information Pack.
Rebate_Code	Rebate Code		Char	4	Stored as the charge-origin code as part of a Charge record within Debtors. The 4 characters are broken into a 3 char code followed by a 1 char suffix code.
Resolution_Date	Date of Resolution	Date of dispute resolution	Date	10	ccyy-MM-dd
Role	Role	Role of a participant in the aseXML	String	4	Note: used for T1060, "USER" is the only acceptable value.
Role_Name_Accelerated_Transfers	Role_Name_Accelerated_Transfers list	Role of a participant in the CATS transfer request process	String	6	USER C" – Current User , USER N – New User,
RoLR	RoLR		Char	12	Default RoLR
RoLR_Date	RoLR Date		Date	10	e.g. yyyy-mm-dd : Date Designated RoLR became FRO
Scheduled_Reading_Day_Number	Scheduled Reading Day Number	In relation to a Meter Reading Route Schedule change the day number on which the meter will be read.	String	2	
Sensitive_Load_Flag	Sensitive Load Flag	A code that indicates whether the Retailer classifies the supply point as a sentitive load "Y" = Yes "N" = No	String	1	"Y" = Yes "N" = No

CSV Element Name	Element Name	Description	Attributes /Format	Logical Length/ Decimal Length	Allowed Values
Service_Date	Service Date	The date the Excluded Service Charge occurred	Date	10	ccyy-MM-dd
Site_Address_City	Site Address City	This relates to the site of the MIRN	Char	29	Free text
Site_Address_Postcode	Site Address Postcode	This relates to the site of the MIRN	String	4	
Site_Address_State	Site Address State	This relates to the site of the MIRN	Char	3	State abbreviation eg. SA, VIC, NSW, etc.
Special_Job_Instructions	Special Job Instructions		String	160	
State_Or_Territory	Site Address State (Address Elements)	Defines the state as per Australian Standard AS4590	String	3	"AAT", "ACT", "NSW", "NT", "QLD", "SA", "TAS", "VIC", "WA"
Street_Name_1 Street_Name_2	Street Name (Address Elements)	Defines the street name as per Australian Standard AS4590	String	30	Note: Street_Name_2 is not used in WA.
Street_Suffix_1 Street_Suffix_2	Street Suffix (Address Elements)	Defines the street suffix as per Australian Standard AS4590	String	2	See aseXML data element address Note: Street_Suffix_2 is not used in WA.
Street_Type_1 Street_Type_2	Street Type (Address Elements)	Defines the street type as per Australian Standard AS4590	String	4	See aseXML data element address. Note: Street_Type_2 is not used in WA.
Suburb_Or_Place_Or_Locality	Site Address City (Address Elements)	Defines the suburb or locality as per Australian Standard AS4590	String	46	
Supply_Point_Code	Supply Point Code		Alpha	1	B = Basic I = Interval T = Transmission
Temperature_Sensitivity_Factor	Temperature Sensitivity Factor	This contains the temperature sensitivity heating rate for the delivery point.	Numeric	9,2	
To_Date	To Date		Date	10	ccyy-MM-dd
Total	Total	In relation to tariff "V" DUoS charges the sum of the variable peak, variable off peak, and fixed charges for this period.	Numeric	11,2	
Total_Daily_Consumption	Total Daily Consumption	The total consumption for the day	Numeric	10	In MJ
Transaction_ID	Transaction Identifier	Unique transaction or line identifier. This has the effect of ensuring that each charge is uniquely referenced, enabling effective B2B communication of disputes, etc.	String	17	

CSV Element Name	Element Name	Description	Attributes /Format	Logical Length/ Decimal Length	Allowed Values
Transaction_Date	Transaction Date	Date this invoice line was created in the Source system. In the case of a cancellation, the transaction date is the date the transaction is cancelled rather than date of the original transaction.	Date	10	ccyy-MM-dd
Transmission_Zone	Transmission Zone		Numeric	2,0	
tsf	Temperature Sensitivity Factor	This contains the temperature sensitivity heating rate for the delivery point.	Numeric	9,2	
Type_of_Read	Type of Read	Indicator identifying the type of reading which has taken place.	String	1	"A" = Actual, "E" = Estimated "S" = Substituted "C" = Customer Own Read (not used in WA) "D" = Deemed
Variable_Off_Peak	Variable Off Peak	In relation to tariff "V" DUoS charges, the variable off peak charge in the billing period.	Numeric	11,2	
Variable_Charge_1	M	In relation to tariff "H" Duos charges, the fixed charge used for *Usage* related variable charges for all steps. Exclusive of GST.	Numeric	11,2	
Variable_Charge_2	M	In relation to tariff "H" Duos charges, the fixed charge used for *Peak* usage related variable charges. Exclusive of GST.	Numeric	11,2	
Variable_Charge_3	M	In relation to tariff "H" Duos charges, the fixed charge used for *Overrun* related variable charges. Exclusive of GST.	Numeric	11,2	
Variable_Charge_4	M	In relation to tariff "H" Duos charges, the fixed charge used for all *Other* variable charges. Exclusive of GST.	Numeric	11,2	
Variable_Peak	Variable Peak	In relation to tariff "V" DUoS charges, the variable peak charge in the billing period.	Numeric	11,2	

CSV Element Name	Element Name	Description	Attributes /Format	Logical Length/ Decimal Length	Allowed Values
Volume_Flow	Volume Flow	Volume Flow is calculated by subtracting the Previous Index Value from the Current Index Value. A factor of 2.832 is applied to convert imperial registering Meters	Numeric	11,2	Cubic Metres
Work_Request_Number	Work Request Number	Unique reference number that the Network Operator assigns to the work for tracking and auditing purposes.	String	15	

Appendix B. aseXML Standard Event Codes

Error reporting is an important function of message and transaction acknowledgements. Errors will also need to be reported in response transactions. In order for errors to be reported consistently, aseXML defines a standard <Event> element for this purpose. Zero, one or more <Event> elements are supported within a <MessageAcknowledgement> or a <TransactionAcknowledgement> element. Details of error reporting and the <Event> element are contained in Guidelines for Development of A Standard for Energy Transactions in XML (aseXML) (Version 2.1). Usage of these event codes in the SA and WA markets is described in the B2M & B2B System Specifications document.

The following standard aseXML event codes shall apply to Gas FRC communications. These have been taken directly from the aseXML Guidelines (Version 2.1). Any application specific Event Codes defined specifically for GAS FRC are defined in Appendix C and specified in the detailed interface definitions section of this document.

Class	Code	Description	Notes
	0	Success, OK, Accepted, etc.	Any class
Message (1-99)	1	Not well formed	
	2	Schema validation failure	
	3	Transaction not supported within Transaction Group	The transaction is not supported by the receiving system in the context of the provided transaction group
	4	Transaction version not supported	
	5	Uncompression failure	This covers both errors in the uncompression process and the absence of the appropriate file within the compressed format container
	6	Message too big	
	7	Header mismatch	Information provided by transport layer is inconsistent with the message header
	8	Incorrect market	The system to which the message is addressed does not handle the market indicated in the header
	9	Unknown Transaction Group	The transaction group is not supported by the receiving system
	10	Duplicate Transaction	

Class	Code	Description	Notes
Processing (100-199)	100	Application unavailable	
	101	Database data error	Typically the result of code error, such as insufficient checking of data validity prior to insertion into the database.
	102	Database system error	e.g. major database problem
Application (200-999)	200	Record(s) not found	
	201	Data missing	
	202	Data invalid	
	203	Unknown report	Requested report not supported by receiving system
	204	Missing or invalid report parameters	
	205	Unknown Table	Requested table is not replicated by the receiving system
	206	Unknown initiating ID	We didn't send this transaction – no record of initiating transaction ID. Therefore the response transaction does not belong to us.
	999	Unexpected Error	Any Class. Must be accompanied by an <Explanation> element. Only to be used where an error can't reasonably be mapped to an existing error code optionally carrying an <Explanation> element to further explain the specific nature of the error.

Appendix C. Gas FRC Application Event Codes

The following Gas FRC B2B specific aseXML event codes shall apply to Gas FRC communications. The 'Code' sub-element within the 'Event' element is a numeric code corresponding to the particular event condition. The code used should be one of those defined in the following list and the field should not be 'padded' with zeros.

Group	Code	Description	Severity	Invoking Transaction
B2B (3600–3799)	3601	Action Type invalid	Error	ServiceOrderRequest SpecialReadRequest
	3602	Recipient did not initiate Request	Error	ServiceOrderResponse (Note: Not applicable for DB initiated Service Orders) SpecialReadResponse MeterDataHistoryResponse, NMIStandingDataResponse, NMIDiscoveryResponse, MeterDataVerifyResponse
	3603	Recipient is not responsible for the supplied MIRN	Error	all
	3604	MIRN not provided, but mandatory for the Enquiry Code in transaction	Error	ServiceOrderRequest
	3606	Address not found	Error	NMIDiscoveryRequest
	3608	Address outside DB area	Error	ServiceOrderRequest, NMIDiscoveryRequest
	3609	ServiceOrderNumber not provided, but mandatory	Error	ServiceOrderResponse
	3610	RBReferenceNumber invalid	Error	ServiceOrderResponse MeterDataNotification
	3613	Appointment Date must not be earlier than transaction date	Warning	ServiceOrderRequest, SpecialReadRequest
	3616	Customer Characterisation not provided, but mandatory for supplied Enquiry Code	Error	ServiceOrderRequest
	3617	Load Details/Hour not provided, but mandatory for supplied Enquiry Code	Error	ServiceOrderRequest
	3618	Meter Inlet Pressure not provided, but mandatory for supplied Enquiry Code	Error	ServiceOrderRequest
	3619	Required certification details not provided	Error	ServiceOrderRequest
	3622	DateServiceOrderCompleted cannot be prior to initial Service request	Warning	ServiceOrderResponse
	3624	Invalid Removed MeterSerialNumber	Error	ServiceOrderResponse
	3625	Invalid Removed MeterReadIndexValue	Warning	ServiceOrderResponse
	3626	Invalid New MeterSerialNumber	Warning	ServiceOrderResponse

Group	Code	Description	Severity	Invoking Transaction
	3627	Invalid Pressure Correction Factor	Warning	ServiceOrderResponse, MeterDataNotification, MeterDataHistoryResponse
	3628	Invalid MeterTypeSizeCode	Warning	ServiceOrderResponse
	3629	Invalid New MeterReadIndexValue	Warning	ServiceOrderResponse
	3630	Invalid NextScheduledReadDate	Warning	ServiceOrderResponse
	3631	NextScheduledReadDate cannot be in past	Warning	ServiceOrderResponse
	3632	Invalid ScheduledReadingDayNumber	Warning	ServiceOrderResponse
	3633	Invalid Current MeterRead IndexValue	Warning	ServiceOrderResponse
	3634	DateOfAttemptedAccess cannot be in future	Error	ServiceOrderResponse
	3635	Invalid JobCompletionCode1	Error	ServiceOrderResponse
	3636	Invalid JobCompletionCode2	Error	ServiceOrderResponse
	3637	Invalid JobCompletionCode3	Error	ServiceOrderResponse
	3638	MIRN is de-registered	Error	NMIStandingDataRequest, NMIDiscoveryRequest
	3639	Multiple matches found	Information	NMIDiscoveryRequest
	3642	Invalid Date Range	Error	MeterDataHistoryRequest
	3644	New request with previously used RB Reference Number	Error	SpecialReadRequest, ServiceOrderRequest
	3646	No Read for Read Date Specified	Error	MeterDataVerifyRequest
	3647	Incorrect Index for Date Specified	Warning	MeterDataVerifyRequest
	3648	Incorrect Previous Read Date	Warning	MeterDataNotification, MeterDataHistoryResponse
	3649	Incorrect Previous Index Value	Warning	MeterDataNotification, MeterDataHistoryResponse
	3650	Incorrect Average Heating Value	Warning	MeterDataNotification, MeterDataHistoryResponse
	3651	Incorrect Consumption Calculation	Warning	MeterDataNotification, MeterDataHistoryResponse
	3652	Estimate on Special Read (not applicable to final reads)	Error	MeterDataNotification, MeterDataHistoryResponse
	3653	Incorrect NSRD	Warning	MeterDataNotification, MeterDataHistoryResponse
	3654	Incorrect Gas_Meter_Number	Warning	MeterDataNotification, MeterDataHistoryResponse
	3655	No Actual Read for 12 months	Warning	MeterDataNotification, MeterDataHistoryResponse
	3657	Duplicate Read	Error	MeterDataNotification, MeterDataHistoryResponse

Group	Code	Description	Severity	Invoking Transaction
	3658	RB Reference Number Missing for Special Read	Warning	MeterDataNotification
	3659	Unrecognised Event Code	Warning	all
	3660	MIRN is not a gas meter	Error	NMIStandingDataRequest, NMIDiscoveryRequest
	3662	MIRN checksum invalid	Error	all
	3665	RecordCount element does not match number of records in CSV file	Error	All transactions containing CSV files
	3666	Data does not match the CSV format definition	Error	All transactions containing CSV files
	3667	Address supplied is not valid	Error	AmendMeterRouteDetails(CSVAmend SiteAddressDetails)
	3668	Invalid Customer Characterisation	Error	AmendMeterRouteDetails(CSVAmend SiteAddressDetails)
	3669	Invalid Scheduled_Reading_Day_Number	Warning	AccountCreationNotification
	3670	Missing mandatory CSV field	Error	All transactions containing CSV files
	3671	Proposed index value or date missing (one supplied without the other)	Error	MeterDataVerifyRequest
	3672	Invalid data in CSV record	Error	All transactions containing CSV files
	3673	Invalid data in aseXML field	Error	All
	3674	Data in CSV record ignored	Warning	All transactions containing CSV files
	3675	Unable to cancel request	Error	ServiceOrderRequest, SpecialReadRequest
	3676	Estimated read replacing actual read (Note – this event code is not applicable if the read is tagged as an adjusted read)	Error	MeterDataNotification
	3677	Updated details not valid	Error	AmendMeterRouteDetails
	3678	Special Read Reason Code invalid for gas	Error	SpecialReadRequest
	3679	Inappropriate Type of Read for Reading Reason	Error	MeterDataNotification
	3680	Multiple MIRNs returned	Information	NMIDiscoveryResponse

Note – The guiding principle is that event codes should generally be returned in transaction acknowledgments. For those CSV based transactions that have a specific response transaction some event codes may be returned in the response transaction instead.

Appendix D. Table of Transactions Cross-Reference

The following table is based on the GTPWG Table of Transactions produced for the Victorian Gas FRC Market. The original numbers of these transactions have been retained and are shown in the first Column. This table shows the aseXML transactions which are used for each of these information flows. Where appropriate, cross references to Process Flow diagrams and the Retail Market Procedures are also provided.

Gas Information Protocol (GIP) Transaction No	Transaction Type	Comms Type	ase XML Transaction	Process Flow Reference	SA RMP Ref	WA RMP Ref.	Section Reference	Transaction Transport Method
3	Special Read Request	B2B	SpecialReadRequest	MR4A	3.1.2	R147	4.1.5.1	aseXML
3A	Special Read Request Response	B2B	SpecialReadResponse	MR4A	6.5.2 3.1.2	R99 R147	4.1.5.1	aseXML
6	Special Read Request No Access advice	B2B	SpecialReadResponse	MR4A	6.5.2 3.1.2	R99 R147	4.1.5.1	aseXML
9	Energy Flow for Special Read (note: - Not a Customer Transfer Request)	B2B	MeterDataNotification	MR4A	3.1.2	R147	4.1.2.1	aseXML for Basic Electronic File for interval
9A	Energy Flow for Special Read (note: - Not a Customer Transfer Request) Response	B2B	MeterDataResponse	MR4A			4.1.2.2	aseXML
12	Account creation transaction.	B2B	AccountCreationNotification	MR5	6.8.2	R103	4.1.7.1	aseXML
13	Energy Flow for Special Read for a Customer Transfer	B2B	MeterDataNotification	MR13			4.1.2.1	aseXML for Basic Electronic File for interval

Gas Information Protocol (GIP) Transaction No	Transaction Type	Comms Type	ase XML Transaction	Process Flow Reference	SA RMP Ref	WA RMP Ref.	Section Reference	Transaction Transport Method
13A	Energy Flow for Special Read for a Customer Transfer Response	B2B	MeterDataResponse	MR13			4.1.2.2	aseXML
15	Disconnection Read	B2B	MeterReadInputNotification	MR9B	4.2.4	R111	0	aseXML
17	Energy Flow for Disconnection Read	B2B	MeterDataNotification	MR9B	4.2.1 (f) and 4.2.2	R107	4.1.2.1	aseXML for Basic Electronic File for interval
17A	Energy Flow for Disconnection Read Response	B2B	MeterDataResponse	MR13			4.1.2.2	aseXML
41	Energy Flow for Schedule or Special Read	B2B	MeterDataNotification	MR13			4.1.2.1	aseXML for Basic Electronic File for interval
41A	Energy Flow for Schedule or Special Read Response	B2B	MeterDataResponse	MR13			4.1.2.2	aseXML
45	Energy History Request	B2B	N/A	MR3	3.9 (a)	R167	Appendix E	Manual process/ Electronic File
46	Energy History Response	B2B	N/A	MR3	3.9 (a)	R167	Appendix E	Electronic File
49	User requesting missing meter reading data	B2B	MeterDataMissingNotification	REQ2			4.1.3.1	aseXML
50	Energy Flow for Missing Reads	B2B	MeterDataNotification	REQ2			4.1.2.2	aseXML for Basic Electronic File for interval
50A	Energy Flow for Missing Reads Response	B2B	MeterDataResponse	REQ2			4.1.2.2	aseXML

Gas Information Protocol (GIP) Transaction No	Transaction Type	Comms Type	ase XML Transaction	Process Flow Reference	SA RMP Ref	WA RMP Ref.	Section Reference	Transaction Transport Method
51	Energy Flow for an Estimate Read	B2B	MeterDataNotification	MR13			4.1.2.2	aseXML for Basic Electronic File for interval
51A	Energy Flow for an Estimate Read Response	B2B	MeterDataResponse	MR13			4.1.2.2	aseXML
53	Energy Flow for a Substituted Read	B2B	MeterDataNotification	MR13	3.5.4	R157	4.1.2.1	aseXML for Basic Electronic File for interval
53A	Energy Flow for a Substituted Read Response	B2B	MeterDataResponse	MR13			4.1.2.2	aseXML
66	Meter Site Access Information Change from RB	B2B	AmendMeterRouteDetails	MR7	N/A	R61	4.4.2.1	aseXML
67	Meter Site Access Information Change from DB	B2B	AmendMeterRouteDetails	DB1	N/A	R62	4.4.2.1	aseXML
68	Supply Point Information	B2B	AmendMeterRouteDetails	MR7			4.4.3.1	aseXML
69	Address Information Change from DB	B2B	AmendMeterRouteDetails	DB1	N/A	R62	4.4.3.1	aseXML
70	Amend Customer Details	B2B	CustomerDetailsNotification				4.6	aseXML (SA Only)
71	Amend Customer Details	B2B	N/A				Appendix E	Electronic File
74	Annual Meter Reading Schedule	B2B	N/A	MR6	3.1.1	R144	Appendix E	Electronic File
75	Meter Reading Route Change	B2B	N/A	MR2	3.1.1	R145	Appendix E	Electronic File
87	Meter Fix request "A" or "B" type.	B2B	ServiceOrderRequest	MIRN2/3			4.2.3.4	aseXML
87A	Meter Fix request "A" or "B" type Response	B2B	ServiceOrderResponse	MIRN2/3			4.2.3.5	aseXML

Gas Information Protocol (GIP) Transaction No	Transaction Type	Comms Type	ase XML Transaction	Process Flow Reference	SA RMP Ref	WA RMP Ref.	Section Reference	Transaction Transport Method
92	Meter Fix completed	B2B	ServiceOrderResponse	MIRN2/3	4.1	R 65	4.2.3.5	aseXML
93	No Access to complete Meter Fix	B2B	ServiceOrderResponse	MIRN2/3			4.2.3.5	aseXML
101	Meter Change Request	B2B	ServiceOrderRequest	REQ5A			4.2.3.4	aseXML
101A	Meter Change Request Response	B2B	ServiceOrderResponse	REQ5A			4.2.3.5	aseXML
104	No Access to complete Meter Change	B2B	ServiceOrderResponse	REQ5A			4.2.3.5	aseXML
108	Meter Change Completed	B2B	ServiceOrderResponse	REQ5A			4.2.3.5	aseXML
120	Request Basic Meter Upgrade	B2B	N/A	MR12			N/A	Notice
121	Quote for Upgrade of Basic Meter	B2B	N/A	MR12	N/A	R140	N/A	Notice
122	Accept quote for Basic Meter Upgrade	B2B	N/A	MR12	N/A	R140	N/A	Notice
125	Meter Upgrade Completed RB Advice	B2B	N/A	MR12	4.3	R141	4.2.3.5	Notice
136	Time Expired Meters Notification	B2B	N/A				Appendix E	Electronic File
151	Meter Removal Request	B2B	ServiceOrderRequest	MR11	4.4.1	R125	4.2.3.4	aseXML
151A	Meter Removal Request Response	B2B	ServiceOrderResponse	MR11	4.4.1 4.4.2	R126 R127	4.2.3.5	aseXML
154	No Access to complete Meter Removal	B2B	ServiceOrderResponse	REQ5A			4.2.3.5	aseXML
157	Meter Removal Completed	B2B	ServiceOrderResponse	MR11	4.4.2 N/A N/A	R127 R128 R140 WA Only	4.2.3.5	aseXML
231	Account creation transaction.	B2B	AccountCreationNotification	MR5	6.8.2	R103	4.1.7.1	aseXML
242	Meter Data Verification	B2B	MeterDataVerifyRequest	REQ1			4.1.6.1	aseXML

Gas Information Protocol (GIP) Transaction No	Transaction Type	Comms Type	ase XML Transaction	Process Flow Reference	SA RMP Ref	WA RMP Ref.	Section Reference	Transaction Transport Method
243	Meter Data Verification	B2B	MeterDataVerifyResponse	REQ1			4.1.6.2	aseXML
246	Energy Flow Adjustment for RB	B2B	MeterDataNotification	REQ1			4.1.2.1	aseXML for Basic Electronic File for interval
246A	Energy Flow Adjustment for RB Response	B2B	MeterDataResponse	REQ1			4.1.2.2	aseXML
280	Discovery request	B2B	NMIDiscoveryRequest	MIRN4B	5.1.1 5.2.2	R74 R75	4.3.2.2	aseXML
			NMIStandingDataRequest	MIRN4A			4.3.2.5	aseXML
281	MIRN Standing Data	B2B	NMIDiscoveryResponse	MIRN4B	5.2.2	R75	4.3.2.3	aseXML
			NMIStandingDataResponse	MIRN4A			4.3.2.6	aseXML
284	MIRN Additional Data	B2B	NMIDiscoveryResponse	MIRN4B			4.2.3.5	aseXML
			NMIStandingDataResponse	MIRN4A			4.3.2.6	aseXML
285	MIRN Discovery Assistance	B2B	N/A	N/A	5.3	R76	N/A	Notice
289	Standing Data Change from DB	B2B	N/A	N/A	N/A	R62	Appendix E	Electronic File
298	Refresh of New Street Listing for MIRN Discovery	B2B	N/A	N/A			Appendix E	Electronic File
310	Service Connection requests	B2B	ServiceOrderRequest	MIRN1			4.2.3.4	aseXML
310A	Service Connection requests Response	B2B	ServiceOrderResponse	MIRN1	4.1	R 65	4.2.3.5	aseXML
311	Service Connection Complete	B2B	ServiceOrderResponse	MIRN1	4.1 3.7.2	R 65 R161	4.2.3.4	aseXML
312	Service Disconnection Request	B2B	ServiceOrderRequest	MR9A	4.2.1 4.2.3	R105 R108	4.2.3.5	aseXML

Gas Information Protocol (GIP) Transaction No	Transaction Type	Comms Type	ase XML Transaction	Process Flow Reference	SA RMP Ref	WA RMP Ref.	Section Reference	Transaction Transport Method
312A	Service Disconnection Request Response	B2B	ServiceOrderResponse	MR9A	4.2.1 4.2.1 (f) and 4.2.2 4.2.3 4.2.3	R106 R107 R109 R110	4.2.3.5	aseXML
313	Service Disconnection Complete	B2B	ServiceOrderResponse	MR9A	4.2.1 (f) and 4.2.2	R107	4.2.3.5	aseXML
314	Service Orders for Priority C-K	B2B	ServiceOrderRequest	MR10	4.2.7	R117	4.2.3.4	aseXML
314A	Service Orders for Priority C-K Response	B2B	ServiceOrderResponse	MR10	4.2.7 4.2.8	R118 R119	4.2.3.5	aseXML
315	Service Orders Completed for Priority A-K	B2B	ServiceOrderResponse	MR10	4.2.8	R119	4.2.3.5	aseXML
316	Relocate Service Connection request	B2B	ServiceOrderRequest	REQ5A			4.2.3.4	aseXML
316A	Relocate Service Connection request Response	B2B	ServiceOrderResponse	REQ5A			4.2.3.5	aseXML
317	Relocate Service Complete	B2B	ServiceOrderResponse	REQ5A			4.2.3.5	aseXML
318	Upgrade Service Size request	B2B	ServiceOrderRequest	REQ5A			4.2.3.4	aseXML
318A	Upgrade Service Size request Response	B2B	ServiceOrderResponse	REQ5A			4.2.3.5	aseXML
319	Upgrade Service Size Complete	B2B	ServiceOrderResponse	REQ5A			4.2.3.5	aseXML
320	Upgrade Meter Size request	B2B	ServiceOrderRequest	REQ5A			4.2.3.4	aseXML
320A	Upgrade Meter Size request Response	B2B	ServiceOrderResponse	REQ5A			4.2.3.5	aseXML

Gas Information Protocol (GIP) Transaction No	Transaction Type	Comms Type	ase XML Transaction	Process Flow Reference	SA RMP Ref	WA RMP Ref.	Section Reference	Transaction Transport Method
321	Upgrade Meter Size Complete	B2B	ServiceOrderResponse	REQ5A	4.3	R140 WA R141	4.2.3.5	aseXML
330	Notification of planned outage	B2B	N/A	REQ5			Appendix E	Electronic File
331	Network Duos billing details (Tariff V)	B2B	NetworkDUoSBillingNotification				4.5.2.1	aseXML
331	Network Duos billing details (Tariff H) WA Only	B2B	NetworkDUoSBillingNotification				4.5.2.1	aseXML
332	Network Duos billing details (Tariff D)	B2B	NetworkDUoSBillingNotification				4.5.2.1	aseXML
333	Meter Range Updates	B2B	N/A				Appendix E	Electronic File
350	Network DUoS Billing Details (Excluded Services)	B2B	NetworkDUoSBillingNotification				4.5.2.1	aseXML
351	Network DUoS Billing Details (Dispute Notification)	B2B	NetworkDUoSBillingNotification				4.5.2.1	aseXML

Note: Transactions 31, 31A and 31B listed in the Victorian version of this document, are not used in SA or WA.

Appendix E. Non Automated Electronic Files

Overview

The following sections specify the format of those B2B 'electronic file' transactions (not aseXML) which use CSV components. The CSV component will be incorporated into a file, compressed and then communicated via an e-mail or on a disk.
The CSV file name shall be constructed as described in the CSV File Format Specification Document. If the CSV file is attached to an e-mail, the subject line must be constructed as defined in CSV File Format Specification Document. The transaction name must be taken from the table below.

This document covers CSV details for the following transactions.

Transaction number	Transaction Type Description	CSV File Name / e-Mail Subject Component Name
45	Energy History Request	ENERGYHISTORYREQUEST
45A	Bulk Basic-Metered Energy History Request	BULKBASICHISTORYREQUEST
46	Energy History Response	ENERGYHISTORYRESPONSE
	Interval Meter Energy History Response	INTERVALHISTORYRESPONSE
71	Amend Customer Details	AMENDCUSTOMERDETAILS
74	Annual Meter Reading Schedule	METERREADINGSCHEDULE
75	Meter Reading Route Change	READINGROUTECHANGE
136	Time Expired Meters Notification	TIMEEXPIREDMETERS
289	Standing Data Change From DB	STANDINGDATACHANGE
298	Refresh of New Street Listing for MIRN Discovery	NEWSTREETLISTING
299	Complete MIRN Listing (WA)	distributor_ccyymmddhhmiss.zip
299	Complete MIRN Listing (SA)	distributor_ccyymmddhhmiss.zip
330	Notification of Planned Outage	SERVICERENEWAL
333	Meter Range Updates	METERRANGEUPDATE
	Interval Meter Data	INTERVALMETERDATA

Note, the order of columns designators/headers in CSV files described by this document is fixed and is as defined in this specification.

Energy History Request (T45)

This transaction is an ad-hoc type request used by the User to request energy history from the Network Operator. The request may have resulted from a customer requesting such information or the User may require the information as an integrity check. It is initiated by the User and is passed to the Network Operator via e-mail.

Transaction 45, Energy History Request (T45)		
Heading/Column designator	**SA/WA and Victoria Mandatory/ Optional**	**Comment**
NMI	M	
NMI_Checksum	M	
Begin_Date	M	
End_Date	M	
Full_History_Required	M	

Bulk Basic Metered Energy History Request (T45A)

This transaction is an ad-hoc type request used by the User to request bulk basic-metered energy history data from the Network Operator. The request limit is per User per day is determined by the Network Operator, for the previous two years of energy history data. The request may have resulted from a customer requesting such information or the User may require the information as an integrity check. It is initiated by the User and is passed to the Network Operator via e-mail

Transaction 45A, Energy History Request (T45A)		
Heading/Column designator	**SA/WA and Victoria Mandatory/ Optional**	**Comment**
Request_Type	M	Must be "EHR"
NMI	M	
NMI_Checksum	M	
GBO_ID	M	User's GBO ID
Begin_Date	M	yyyy-mm-dd
End_Date	M	yyyy-mm-dd
Email_Address	M	User's email address code as recorded by the Network Operator

Energy History Response (T46)

This transaction is a response to the Energy History Request (T45) for a basic meter. This response is initiated by the Network Operator and is passed to the User via e-mail.
The Meter Status is indicative of the current meter status and has no relevance to history.

Transaction 46, CSVHistoryResponseData			
Heading/Column designator	**SA/WA Mandatory/ Optional**	**Victoria Mandatory/ Optional**	**Comment**
NMI	M	M	
NMI_Checksum	M	M	
RB_Reference_Number	O	O	
Reason_for_Read	M	M	
Gas_Meter_Number	M	M	
MeterTypeSizeCode	M	Not included	
Gas_Meter_Units	M	M	
Previous_Index_Value	O	O	Required unless this is the first read for a meter. If not provided the Consumed_Energywill be zero.
Previous_Read_Date	O	O	Required unless this is the first read for a meter. If not provided the Consumed_Energywill be zero.
Current_Index_Value	M	M	
Current_Read_Date	M	M	
Volume_Flow	M	M	Volume Flow is measured in cubic meters
Average_Heating_Value	M	M	
Pressure_Correction_Factor	M	M	
Consumed_Energy	M	M	Consumed Energy is measured in Megajoules
Type_of_Read	M	M	
Estimation_Substitution_Type	O	O	Required if Type of Read = “E” or “S”

Transaction 46, CSVHistoryResponseData			
Heading/Column designator	**SA/WA Mandatory/ Optional**	**Victoria Mandatory/ Optional**	**Comment**
Estimation_Substitution_Reason_Code	O	O	Required if Type of Read = "E" or "S"
Meter_Status	O	M	This element reflects the **current** meter status. Not used in WA.
Next_Scheduled_Read_Date	M	M	
Hi_Low_Failure	M	M	
Meter_Capacity_Failure	M	M	
Adjustment_Reason_Code	M	M	If not = "NC" indicates Meter Data Adjustment
Energy_Calculation_Date_Stamp	NR	NR	This element is defined for use in the corresponding B2M transactions. It is not required for the transactions in this document.
Energy_Calculation_Time_Stamp	NR	NR	This element is defined for use in the corresponding B2M transactions. It is not required for the transactions in this document.

Interval Meter Energy History Response

This transaction is a response to the Energy History Request (T45) for an interval meter. This response is initiated by the Network Operator and is passed to the User via email. Note that the Meter Type is assumed to be 'Interval' from the transaction header. This CSV file is identical in structure to that used to provide Interval Meter Data

INTERVALHISTORYRESPONSE		
Heading/Column designator	**SA/WA Mandatory/ Optional**	**Comment**
NMI	M	
NMI_Checksum	M	
Current_Read_Date	M	
Type_of_Read	M	Note: the allowed value 'deemed' does not apply for this transaction

INTERVALHISTORYRESPONSE		
Heading/Column designator	**SA/WA Mandatory/ Optional**	**Comment**
Daily_Heating_Value	M	
CONSUMPTION_HR01	M	
CONSUMPTION_HR02	M	
CONSUMPTION_HR03	M	
CONSUMPTION_HR04	M	
CONSUMPTION_HR05	M	
CONSUMPTION_HR06	M	
CONSUMPTION_HR07	M	
CONSUMPTION_HR08	M	
CONSUMPTION_HR09	M	
CONSUMPTION_HR10	M	
CONSUMPTION_HR11	M	
CONSUMPTION_HR12	M	
CONSUMPTION_HR13	M	
CONSUMPTION_HR14	M	
CONSUMPTION_HR15	M	
CONSUMPTION_HR16	M	
CONSUMPTION_HR17	M	
CONSUMPTION_HR18	M	
CONSUMPTION_HR19	M	
CONSUMPTION_HR20	M	
CONSUMPTION_HR21	M	
CONSUMPTION_HR22	M	
CONSUMPTION_HR23	M	
CONSUMPTION_HR24	M	
TOTAL_DAILY_CONSUMPTION	M	
PEAK_RATE	M	WA only, the peak flow rate during the day

Amend Customer Details Six Monthly Refresh (T71) – Not used in WA

This transaction is used to notify a Network Operator to update Customer Contact details such as "Customers Name" for a given MIRN etc. It is initiated by the User and is passed to the Network Operator and the frequency once ever six months.

TRANSACTION 71 AMENDCUSTOMERDETAILS		
Heading/Column designator	Mandatory/ Optional	Comment
NMI	M	
NMI_Checksum	M	
Person_Name_Title	O	Contains customer's title
Person_Name_Given	O	Contains customer's first name
Person_Name_Family	O	Contains customer's surname
Business_ Name	O	Contains company or business name
ContactDetail_ PersonName	O	Contains contact's mailing name or company name
Mail_ Address_Line_1	O	Contains formatted postal address details
Mail_ Address_Line_2	O	Contains formatted postal address details
Mail_ Address_Line_3	O	Contains formatted postal address details
Suburb_Or_ Place_Or_ Locality	M	Contains postal address suburb details
State_Or_Territory	M	Contains postal address state details
Postcode	M	Contains postal address postcode
ContactDetail_ PhoneNumber_1	O	Contains contact's primary phone number
ContactDetail_ PhoneNumber_2	O	Contains contact's secondary phone number
Sensitive_ Load_ Flag	O	A code that indicates whether the Retailer classifies the supply point as a sensitive load"Y" = Yes"N" = No
Movement_ Type	M	A code that indicates the customer details update status"MI" = Move In"MO" = Move Out"UP" = Update

Annual Meter Reading Schedule (T74)

This transaction is used to advise the User of the annual listing of proposed reading schedule. It is initiated by the Network Operator and is passed to the User. The data is expected to be sorted in date order.

An example of a CSV file is below:

```
Scheduled_Reading_Day_Number,Meter_Read_Frequency,Date_of_Future_Read
12,B,2002-01-17
12,B,2002-03-19
12,B,2002-05-20
12,B,2002-07-18
12,B,2002-09-16
12,B,2002-11-14
```

Transaction 74		
Heading/Column designator	**SA/WA and Victoria Mandatory/ Optional**	**Comment**
Scheduled_Reading_Day_Number	M	
Meter_Read_Frequency	M	
Date_of_Future_Read	M	

Meter Reading Route Change (T75)

This transaction is used to notification a User of a change to schedule reading day. It is initiated by the Network Operator and is passed to the User.

Transaction 75, CSVAmendScheduledReadingDay		
Heading/Column designator	**SA/WA and Victoria Mandatory/ Optional**	**Comment**
NMI	M	
NMI_Checksum	M	
Reading_Day_Change_Effective_Date	M	
SCHEDULED_READING_DAY_NUMBER	M	

Time Expired Meters Notification (Routine Meter Change in WA) (T136)

This transaction is an ad-hoc type advice used by the Network Operator to notify the User of any planned meter changes it expects to undertake as a result of the Network Operator's meter time expired program change. The User may use this information to advise customers and/or call centres of any such changes. It is initiated by the Network Operator and is passed to the User.

This transaction is not used in SA. For meter exchanges, please refer to T330.

Transaction 136		
Heading/Column designator	**SA/WA and Victoria Mandatory/ Optional**	**Comment**
NMI	M	
NMI_Checksum	M	
Proposed_Meter_Change_Start_Date	M	
Proposed_Meter_Change_End_Date	M	

Standing Data Change From Network Operator (T289)

This transaction is sent to the User to advise that a change in either the MIRN Standing Data or Meter Standing Data has occurred.

Transaction 289			
Heading/Column designator	**SA/WA Mandatory/ Optional**	**Victoria Mandatory/ Optional**	**Comment**
NMI	M	M	
NMI_Checksum	M	M	
Gas_Meter_Number	O	Not included	
Pressure_Correction_Factor	O	Not included	
MeterTypeSizeCode	O	Not included	
Transmission_Zone	O	O	
HEATING_VALUE_ZONE	O	O	
DISTRIBUTION_TARIFF	O	O	
STANDING_DATA_EFFECTIVE_DATE	M	M	

Refresh of New Street Listing for MIRN Discovery (T298)

The Network Operator must make available in an electronic form a remotely accessed street/suburb combination listing for Users. It is used by the User to assist with MIRN Discovery requests (eg: the street name the Network Operator uses in its database). The date of file creation is to be taken as the date on which the data was updated.
The data is prepared by the Network Operator and can either be download from the Network Operator's website or e-mailed, if requested.

Transaction 298			
Heading/Column designator	**SA/WA Mandatory/ Optional**	**Victoria Mandatory/ Optional**	**Comment**
Street_Name	M	M	
Street Type	O	M	To be populated where available. **Note – called 'Street ID' in Victorian document**
Street Suffix	O	Not included	
Suburb_Or_Place_Or_Locality	M	M	
State_Or_Territory	O	Not Included	This will be populated in WA
Postcode	O	Not Included	This will be populated in WA

Complete MIRN Listing (T299) (For WA)

The Network Operator must make available to Users a listing of all distribution metering supply points that have a MIRN assigned and a MIRN status of either Registered (up stand installed), Commissioned (meter installed) or Decommissioned (meter installed but delivery point is disconnected). The Network Operator must ensure that all data fields as per Transaction 299 that are available in their database are transferred to the Complete MIRN listing irrespective of whether the data field is designated as O (optional) in the table for T299.

The Network Operator must ensure that the Complete MIRN Listing file is encrypted and compressed (see section 4.4 for allowable compression formats) in a way that when the User retrieves the file it can be decrypted and uncompressed using the "WinZip" utility.

The Network Operator will utilise the CSV fields and formats consistent with the fields and formats that are used in the aseXML schema applicable for a MIRN Discovery Response which is defined in FRC B2B Systems Interface Definitions, section 4.3.2.3 (NMIDiscoveryResponse).

The Complete MIRN Listing is to be refreshed after the end of the calendar month by the Network Operator and the Network Operator must FTP the refreshed files to their existing

designated folder on GRMS. AEMO will transfer the Complete MIRN Listing to the existing designated folder for each User on GRMS.

The following file naming convention is to be used:
distributor_ccyymmddhhmiss.zip

Note: Reference to "Network Operator" and "User" refer to the Hub participant ID.

Transaction 299		
Heading/Column designator	**Mandatory/Optional**	**Comment**
MIRN	M	Must be present
MIRNChecksum	M	Must be present
FlatOrUnitType	O	
FlatOrUnitNumber	O	
FloorOrLevelType	O	
FloorOrLevelNumber	O	
BuildingOrPropertyName1	O	
BuildingOrPropertyName2	O	
LocationDescriptor	O	
HouseNumber1	O	
HouseNumber2	O	
HouseNumberSuffix1	O	
HouseNumberSuffix2	O	
LotNumber	O	
StreetName1	O	
StreetName2	O	
StreetType1	O	
StreetType2	O	
StreetSuffix1	O	
StreetSuffix2	O	
PostalDeliveryType	O	
PostalDeliveryNumberPrefix	O	
PostalDeliveryNumberValue	O	
PostalDeliveryNumberSuffix	O	
SiteAddressCity	O	

Transaction 299		
Heading/Column designator	**Mandatory/Optional**	**Comment**
SiteAddressState	O	
SiteAddressPostcode	O	
SiteAddressDPID	O	
GasMeterNumber	O	
Address1	O	
Address2	O	
Address3	O	

Refer Appendix A Data Dictionary – CSV Data Elements for the description of the address elements from the table above

Password exchange process

The Complete MIRN Listing password exchange process is as follows:

- *User to nominate an email address to send password. These details are sent to Network Operators;*
- *Password to change each 90 days; and*
- *Network Operators to email password details to user prior to it being used.*

Complete MIRN Listing (T299) –(For SA).

The Network Operator must make available to Retailers a listing of all distribution metering supply points that have a MIRN assigned and a MIRN status of either Registered (up stand installed), Commissioned (meter installed) or Decommissioned (meter removed).

The Network Operator must ensure that the complete MIRN listing file is encrypted and compressed (see section 4 of the FRC CSV File Format Specifications for allowable compression formats) in a way that when the Retailer retrieves the file it can be decrypted and uncompressed using the "WinZip" utility. The Network Operator will utilise the CSV fields and formats consistent with the fields and formats that are used in the aseXML schema applicable for a MIRN Discovery response which is defined in section 4.3.2.3A (NMIDiscoveryResponse).

The complete MIRN listing is to be refreshed after the end of the calendar month by the Network Operator and the Network Operator must FTP the refreshed files to AEMO. AEMO will provide a secure location for each file that enables only Network Operators to directly place the file in a location that enables only Retailers to retrieve that file from the secure location to which the relevant Retailers have Market Information Bulletin Board (MIBB) access privileges that require a username and password.

When the file is FTP'd to AEMO the file extension is to be written as a ".tmp" file and then renamed to prevent the file being processed while it is being delivered. The following file naming convention is to be used:

Jurisdiction_distributor_ccyymmddhhmiss.zip (example - SAGAS_ENVSA_20180302102054)

Note: Reference to "Network Operator" and "Retailer" refer to the Hub participant ID.
The file will be accessible via directory browsing on the MIBB rather than via a separate HTML page that would need to be maintained manually.

TRANSACTION 299		
Heading/Column designator	Mandatory/ Optional	Comment
MIRN	M	Must be present
MIRNChecksum	M	Must be present
FlatOrUnitType	O	
FlatOrUnitNumber	O	
FloorOrLevelType	O	
FloorOrLevelNumber	O	
BuildingOrPropertyName1	O	
BuildingOrPropertyName2	O	
LocationDescriptor	O	
HouseNumber1	O	
HouseNumber2	O	
HouseNumberSuffix1	O	
HouseNumberSuffix2	O	
LotNumber	O	
StreetName1	O	
StreetName2	O	
StreetType1	O	
StreetType2	O	
StreetSuffix1	O	
StreetSuffix2	O	

TRANSACTION 299		
Heading/Column designator	Mandatory/ Optional	Comment
PostalDeliveryType	O	
PostalDeliveryNumberPrefix	O	
PostalDeliveryNumberValue	O	
PostalDeliveryNumberSuffix	O	
SiteAddressCity	O	
SiteAddressState	O	
SiteAddressPostcode	O	
SiteAddressDPID	O	
GasMeterNumber	O	
Address1	O	
Address2	O	
Address3	O	

Password exchange process

The complete MIRN listing password exchange process is as follows:

- Retailer to nominate an email address to send password. These details are sent to the Network Operator.
- Password to change each 90 days consistent with AEMO's MSATS Systems & AEMO's MIBB.
- Network Operator to email password details to retailer prior to it being used.

Notification of Planned Outage (T330) – Not used in WA.

This transaction may be passed by a Network Operator to a User to notify of outages of gas supply. It is an ad-hoc advice to the User and advises of any planned service/mains work which may interrupt supply. The User may provide this information to advise their call centre to advise customers, when requested. It is initiated by the Network Operator and is passed to the User via email. The transaction is provided on an ad hoc basis with at least 4 business days notice.

Note:

1. With respect to mains renewal, the Distributor may provide (as required) notification of impacted streets/areas via a communication letter to the Retailer rather than the CSV file listed below.

2. With respect to planned meter replacements, the Distributor may provide notification of impacted streets/areas via a communication letter to the Retailer rather than the CSV file as listed below.

Transaction 330		
Heading/Column designator	**SA and Victoria Mandatory/ Optional**	**Comment**
NMI	M	
NMI_Checksum	M	
Planned_Outage_Commencement_Date	M	
Planned_Outage_Commencement_Time	M	
Planned_Outage_Completion_Date	M	
Duration_of_Outage	M	

Meter Range Updates (T333) – Not used in WA.

This transaction is used to notify a User to update Meter Attributes such as "Number of Dials" for a given Meter Number Range etc. It is initiated by the Network Operator and is passed to the User.

Transaction 333		
Heading/Column designator	**SA and Victoria Mandatory/ Optional**	**Comment**
Low_Meter_Range	M	
High_Meter_Range	M	
Meter_Type_Size_Code	M	
Number_of_Meter_Dials	M	
Capacity_Group	M	
Meter_Description	M	
Metric_Imperial_Indicator	M	
Capacity	M	
Meter_Attachments	M	

Interval Meter Data

This transaction is used by the Network Operator to provide Interval Meter Data to the User. The data can be downloaded from a secure web site operated by the Network Operator. Note that the Meter Type is assumed to be 'Interval' from the transaction header. Note that this file is also used for an interval meter MDN response

Interval Meter Data		
Heading/Column designator	**SA/WA Mandatory/ Optional**	**Comment**
NMI	M	
NMI_Checksum	M	
Current_Read_Date	M	
Type_of_Read	M	Note: the allowed value 'deemed' does not apply for this transaction
Daily_Heating_Value	M	
CONSUMPTION_HR01	M	
CONSUMPTION_HR02	M	
CONSUMPTION_HR03	M	
CONSUMPTION_HR04	M	
CONSUMPTION_HR05	M	
CONSUMPTION_HR06	M	
CONSUMPTION_HR07	M	
CONSUMPTION_HR08	M	
CONSUMPTION_HR09	M	
CONSUMPTION_HR10	M	
CONSUMPTION_HR11	M	
CONSUMPTION_HR12	M	
CONSUMPTION_HR13	M	
CONSUMPTION_HR14	M	
CONSUMPTION_HR15	M	
CONSUMPTION_HR16	M	
CONSUMPTION_HR17	M	
CONSUMPTION_HR18	M	
CONSUMPTION_HR19	M	
CONSUMPTION_HR20	M	
CONSUMPTION_HR21	M	
CONSUMPTION_HR22	M	
CONSUMPTION_HR23	M	
CONSUMPTION_HR24	M	
TOTAL_DAILY_CONSUMPTION	M	
PEAK_RATE	M	WA only, the peak flow rate during the day

Note the following are SA transactions only:

INTERVALMETERDATA INTERVALHISTORYRESPONSE		
Heading/Column Designator	**SA Mandatory /Optional**	**Comment**
MIRN	M	
MIRN_CHECKSUM	M	
GAS_DAY	M	
CONSUMPTION_HR01	M	
CONSUMPTION_HR02	M	
CONSUMPTION_HR03	M	
CONSUMPTION_HR04	M	
CONSUMPTION_HR05	M	
CONSUMPTION_HR06	M	
CONSUMPTION_HR07	M	
CONSUMPTION_HR08	M	
CONSUMPTION_HR09	M	
CONSUMPTION_HR10	M	
CONSUMPTION_HR11	M	

INTERVALMETERDATA INTERVALHISTORYRESPONSE		
Heading/Column Designator	**SA Mandatory /Optional**	**Comment**
CONSUMPTION_HR12	M	
CONSUMPTION_HR13	M	
CONSUMPTION_HR14	M	
CONSUMPTION_HR15	M	
CONSUMPTION_HR16	M	
CONSUMPTION_HR17	M	
CONSUMPTION_HR18	M	
CONSUMPTION_HR19	M	
CONSUMPTION_HR20	M	
CONSUMPTION_HR21	M	
CONSUMPTION_HR22	M	
CONSUMPTION_HR23	M	
CONSUMPTION_HR24	M	
TOTAL_DAILY_CONSUMPTION	M	
TYPE_OF_READ	M	Note: the allowed value 'deemed' does not apply for this transaction

ENERGYHISTORYREQUEST		
Heading/Column Designator	**SA Mandatory/ Optional**	**Comment**
MIRN	M	
MIRN_CHECKSUM	M	
Begin_Date	M	
End_Date	M	
Retailer_GBOID	M	

Note: This is a new transaction:

HEATINGVALUEDATA		
Heading/Column designator	**SA Mandatory/ Optional**	**Comment**
GAS_DAY	M	
HV_ZONE	M	
HEATING_VALUE	M	

Appendix F. Unstructured Transactions

Overview

The following transactions have been identified for the process of a user requesting an update from a basic to an interval meter.

Transaction number	Transaction Type Description
120	Request Basic Meter Upgrade
121	Quote for Upgrade of Basic Meter
122	Accept Quote for Basic Meter Upgrade

The format of these transactions is not defined as they are generated infrequently. It is largely manual process and the contents of the transactions will differ on a case-by-case basis.

It should be noted that transaction 122 may take the form of an aseXML service order transaction.

The following transactions have been identified for the process of a network operator advising a user that they have entered into a direct billing arrangement.

Transaction number	Transaction Type Description
339	Direct Billing Arrangement

The format of this transaction is not defined as it is infrequently generated. It is expected that this transaction will be sent by email to the User advising of the MIRN and the duration of the arrangement that has been entered into. Other content of the transactions will differ on a case-by-case basis.

The following transactions have been identified for the process of a user advising a network operator to undertake a crossed meter investigation.

Transaction number	Transaction Type Description
354	Crossed Meter Investigation, Initiate Request

The format of this transaction is via e-mail or fax using a standard form called "Field Investigation Report" which is published on the AEMO website.

The following transactions have been identified for the process of a network operator advising a user of the outcome of a crossed meter investigation.

Transaction number	Transaction Type Description
355	Crossed Meter Investigation, Investigation Report

The format of this transaction is via e-mail or fax using a standard from called "Field Investigation Report" which is published on the AEMO website.

The following transactions have been identified for the process of a user requesting a network operator to undertake a Meter High Accounts (MHAs) or Meter Retake and Test (MRT) investigation.

This Unstructured Transaction is in addition to the B2B Service Order Request MHA or MRT.

Transaction number	Transaction Type Description
357	Meter High Accounts (MHAs) or Meter Retake and Test (MRT) Investigation, Initiate Request

The format of this transaction is via e-mail or fax using a standard form called "MHA / MRT Request Template" which is published on the AEMO website.

The following transactions have been identified for the process of a network operator advising a user of the outcome of a Meter High Accounts (MHAs) or Meter Retake and Test (MRT) investigation.

Transaction number	Transaction Type Description
358	Meter High Accounts (MHAs) or Meter Retake and Test (MRT) Investigation Report

The format of this transaction is via e-mail or fax using a standard form called "MHA / MRT Request Template" which is published on the AEMO website.

The following are Unstructured Transactions for SA only.

If a Network Operator has exhausted their assigned allocation set of numbers for use as MIRNs for delivery points, AEMO must allocate further sets of numbers. See RMP clause 2.1 for further details.

Transaction number	Transaction Type Description

287	Allocation of numbers for MIRNS

The format of this transaction is from AEMO via e-mail (rmo@aemo.com.au)

Below is an example:

AEMO E-mail address: rmo@aemo.com.au

Subject Line: "Allocation of numbers for MIRNS (SA RMP clause 2.1)

Content: Start MIRN, End MIRN .

A pipeline operator may, for the purpose of consulting with shippers, request AEMO to provide the identity of shippers on both pipelines. See RMP clause 8.1.5 for further details.

Transaction number	Transaction Type Description
	Request to provide shipper details.

The format of this transaction is to AEMO via e-mail (rmo@aemo.com.au)

Below is an example:

AEMO E-mail address: rmo@aemo.com.au

Subject Line: "Request to provide shipper details (SA RMP clause 8.1.5)

Content: See RMP clause 8.1.5.

The following notice have been identified for the process of a User advising AEMO of unforeseen or material changes that will affect their withdrawal of gas from a sub-network. See RMP clause 8.4.2 for further details.

Transaction number	Transaction Type Description
	Interval-metered withdrawals depart from the allowable variable.

The format of this transaction is to AEMO via e-mail (rmo@aemo.com.au)

Below is an example:

AEMO E-mail address: rmo@aemo.com.au

Subject Line: "Users Interval-metered withdrawals depart from the allowable variable notice (SA RMP clause 8.2.4)

Content: See RMP clause 8.2.4.

Appendix G. RoLR Process (SA Only)

1. Customer and Site Details (Monthly update) (T900)

In order to manage the 'transfer' and customer set up following a RoLR event, all Users are to provide to AEMO, on a monthly basis, a list of MIRNS and associated details for which they are the current user.

The Customer and Site Details (Monthly) listing is to be refreshed after the end of the calendar month by Users. Users must FTP the refreshed files to AEMO. AEMO will provide a secure location for each file that enables Users to directly place the file in a secure location to which the relevant all Users has Market Information Bulletin Board (MIBB) access privileges that require a username and password.

(A) Customer and Site Details File Format
The file must be provided to AEMO in a compressed CSV format (refer to chapter 4 Compression Format as described in Specification Pack document titled FRC CSV File Format Specifications) and without any password Protection.

(B) File Format Transitional Requirement
The requirement to provide the file in the format described in (A) above does not apply to retailers registered before 29 September 2017 until 1 September 2018. For the avoidance of doubt all retailers must provide the file to AEMO in a compressed CSV format after 1 September 2018 (refer to chapter 4 Compression Format as described in Specification Pack document titled FRC CSV File Format Specifications).

The following file naming convention is to be used:

SAGAS_CUSTOMERSITEDETAILSMONTHLY_OriginatorID_RecipientID_CCYYMMDDHHmmSS

Note:

1. Reference to Default RoLR as described below, is as appointed by the Australian Energy Regulator, in accordance with Part 6 of the NERL.

TRANSACTION 900		
Heading/Column designator	Mandatory / Optional	Comment
NMI	M	Must be present
NMI_Checksum	M	Must be present
Person_Name_Title	O	Contains customer's title
Person_Name_Given	O	Contains customer's first name
Person_Name_Family	O	Contains customer's surname if Business-Name is not populated
Business_Name	O	Contains company or business name, required if Person_Name_Family is not populated
Building_OrProperty_Name_1	O	Defines the building or Property name as per the Australian Standard AS4590
Building_OrProperty_Name_2	O	Defines the building or Property name as per the Australian Standard AS4590
ContactDetail_PersonName	O	Contains contact's mailing name or company name
Flat_Or_Unit_Type	O	This relates to the site of the MIRN

TRANSACTION 900		
Heading/Column designator	Mandatory / Optional	Comment
Flat_Or_Unit_Number	O	This relates to the site of the MIRN
Floor_Or_Level_Type	O	This relates to the site of the MIRN
Floor_Or_Level_Number	O	This relates to the site of the MIRN
Location_Description	O	This relates to the site of the MIRN
House_Number_1	O	This relates to the site of the MIRN
House_Number_2	O	This relates to the site of the MIRN
House_Number_Suffix_1	O	This relates to the site of the MIRN
House_Number_Suffix_2	O	This relates to the site of the MIRN
Lot_Number	O	This relates to the site of the MIRN
Street_Name_1	M	This relates to the site of the MIRN
Street_Name_2	O	This relates to the site of the MIRN
Street_Type_1	M	This relates to the site of the MIRN
Street_Type_2	O	This relates to the site of the MIRN
Street_Suffix_1	O	This relates to the site of the MIRN
Street_Suffix_2	O	This relates to the site of the MIRN
Site_Address_City	M	This relates to the site of the MIRN
Site_Address_State	M	This relates to the site of the MIRN
Site_Address_Postcode	M	This relates to the site of the MIRN
Mail_Address_Line_1	O	Contains formatted postal address details
Mail_Address_Line_2	O	Contains formatted postal address details
Mail_Address_Line_3	O	Contains formatted postal address details
Suburb_Or_Place_Or_Locality	O	Contains formatted postal address details
State_Or_Territory	O	Contains formatted postal address details
Postcode		Contains formatted postal address details
ContactDetail_PhoneNumber_1	O	Contains contact's primary phone number
ContactDetail_PhoneNumber_2	O	Contains contact's secondary phone number
Rebate_Code	O	Allowed Codes: Nil.
Pensioner_Or_HealthCare_CardNumber	O	10 – string Nine Numeric and one alpha unique identifier as issued by the Dept. of Social Security or Veterans' Affairs
From_Date	O	Effective date at which the card is valid
To_Date	O	Date at which the card expires
Date_Of_Birth	O	Customer's date of Birth
Customer_Identification	O	12 – string. Contains Customer's Driver's license
RoLR	M	Default RoLR

2. Customer and Site Details (T970)

The T970 is a file that AEMO provide the designated RoLR(s) to manage the transfer and set up of customers in their systems. AEMO will provide this in the CSV format outlined below.

The method of file delivery is FTP from the GRMS.

The following naming convention is to be used.

SAGAS_ROLRSDT_OriginatorID_RecipientID_CCYYMMDDHHmmSS

Name	Data Type	No nulls	Primary Key	Comments
mirn	Varchar(10)	True	True	MIRN
checksum	tinyint	True	False	MIRN Checksum
bl	numeric(9,1)	True	False	Base load
tsf	numeric(9,1)	True	False	Temperature sensitivity
person_name_title	Varchar(12)	False	False	Contains customer's title
person_name_given	Varchar(40)	False	False	Contains customer's first name
person_name_family	Varchar(40)	False	False	Contains customer's surname if Business-Name is not populated
business_name	Varchar(60)	False	False	Contains company or business name, required if Person_Name_Family is not populated
building_orproperty_name_1	Varchar(36)	False	False	Defines the building or Property name as per the Australian Standard AS4590
building_orproperty_name_2	Varchar(36)	False	False	Defines the building or Property name as per the Australian Standard AS4590
contactdetail_personname	Varchar(60)	False	False	Contains contact's mailing name or company name
flat_or_unit_type	varchar(25)	False	False	Code that defines the type of flat or unit as per Australian Standard AS4590-1999 e.g APT, DUP, SHED, SHOP, VLLA
flat_or_unit_number	varchar(25)	False	False	Defines the flat or unit number as per Australian Standard AS4590-1999
floor_or_level_type	varchar(25)	False	False	Code that defines the floor or level type as per Australian Standard AS4590-1999. Allowable codes include B, FL, G, LG, M, UG
floor_or_level_number	varchar(25)	False	False	Defines the floor or level number as per Australian Standard AS4590-1999
location_description	varchar(25)	False	False	Defines the location descriptor as per Australian Standard AS4590-1999. This is a catch-all field for non standard address information
house_number_1	varchar(25)	False	False	Defines the house number as per Australian Standard AS4590-1999 (The combination of House Number and House Number Suffix may occur up to two times)
house_number_2	varchar(25)	False	False	Defines the house number as per Australian Standard AS4590-1999 (The combination of House Number and House Number Suffix may occur up to two times)

house_number_suffix_1	varchar(25)	False	False	Defines the house number suffix as per Australian Standard AS4590-1999 (The combination of House Number and House Number Suffix may occur up to two times) This field may only contain alphanumeric characters
house_number_suffix_2	varchar(25)	False	False	Defines the house number suffix as per Australian Standard AS4590-1999 (The combination of House Number and House Number Suffix may occur up to two times) This field may only contain alphanumeric characters
lot_number	varchar(25)	False	False	Defines the lot number as per Australian Standard AS4590-1999
street_name_1	varchar(30)	False	False	Defines the street name as per Australian Standard AS4590-1999 (The combination of Street Name, Street Type and Street Suffix may occur up to two times) This field may only contain letters, numbers, hypens ('-') and spaces.
street_name_2	varchar(30)	False	False	Defines the street name as per Australian Standard AS4590-1999 (The combination of Street Name, Street Type and Street Suffix may occur up to two times) This field may only contain letters, numbers, hypens ('-') and spaces.
street_type_1	varchar(25)	False	False	A code that defines the street type as allowed for use in MSATS
street_type_2	varchar(25)	False	False	A code that defines the street type as allowed for use in MSATS
street_suffix_1	varchar(2)	False	False	A code that defines the street suffix as per the Australian Standard AS4590-1999. Allowable codes include CN, E, EX, LR, N, NE, NW, S, SE, SW, UP, W
street_suffix_2	varchar(2)	False	False	A code that defines the street suffix as per the Australian Standard AS4590-1999. Allowable codes include CN, E, EX, LR, N, NE, NW, S, SE, SW, UP, W
site_address_city	varchar(29)	False	False	Defines the suburb or locality as per the Australian Standard AS4590-1999
site_address_state	varchar(3)	False	False	A code that defines the state as per the Australian Standard AS4590-1999. e.g AAT, ACT, NSW, NT, QLD, SA, TAS, VIC, WA
site_address_postcode	varchar(4)	False	False	Defines the postcode as per the Australian Standard AS4590-1999. This field may only contain 3 numbers.
mail_address_line_1	varchar(80)	False	False	Contains formatted postal address details
mail_address_line_2	varchar(80)	False	False	Contains formatted postal address details
mail_address_line_3	varchar(80)	False	False	Contains formatted postal address details
suburb_or_place_or_locality	varchar(46)	False	False	Contains formatted postal address details
state_or_territory	varchar(3)	False	False	Contains formatted postal address details
postcode	varchar(4)	False	False	Contains formatted postal address details
contactdetail_phonenumber_1	varchar(15)	False	False	Contains contact's primary phone number
contactdetail_phonenumber_2	varchar(15)	False	False	Contains contact's secondary phone number

rebate_code	varchar(4)	False	False	Allowed Codes: PC Pension Card HCC Health Care Card HBC Health Benefits Card VAC Veterans Affairs Card
pensioner_or_healthcare_cardnumber	varchar(15)	False	False	10 - string Nine Numeric and one alpha unique identifier as issued by the Dept. of Social Security or Veterans' Affairs
from_date	Datetime	False	False	Effective date at which the card is valid. e.g. dd mmm yyyy
to_date	datetime	False	False	Date at which the card expires. e.g. dd mmm yyyy
date_of_birth	datetime	False	False	Customer's date of Birth. e.g. dd mmm yyyy
customer_identification	varchar(12)	False	False	Contains Customer's Driver's license
rolr	Varchar(12)	True	False	Default Retailer

3. List of RoLR transfers (T980)

After a RoLR event has occurred, AEMO will provide the network operator a list of the MIRNs that have been transferred away from the failed retailer to the designated RoLR(s). AEMO will provide this in the CSV format outline below.

The method of file delivery is FTP from the GRMS.

The following naming convention is to be used.

SAGAS_ROLR_LIST OF ROLR TRANSFERS_OriginatorID_RecipientID_CCYYMMDDHHmmSS

Name	Data Type	No Nulls	Primary Key	Comments
mirn	Varchar(10)	True	True	MIRN
checksum	tinyint	True	False	MIRN Checksum
frb	Varchar(12)	True	False	Failing Retailer Business. e.g ENERGYAUST
rolr	Varchar(12)	True	False	Designated retailer. E.g ORIGIN
rolr_date	Datetime	True	False	e.g. yyyy-mm-dd : Date Designated RoLR became FRO

4. MIRN Standing Data (T1000)

In order for the designated RoLR(s) to manage the customer set up following a RoLR event, the network operator is to provide the designated RoLR(s) the standing data details for MIRNs which the designated RoLR(s) has become the current user for during the RoLR event. Network Operator provide this in the CSV format outlined below.

This will be based on the MIRNs provided to the Network Operator in the T980.

The method of data delivery will be via an agreed method between parties and not via the FRC hub.

The following file naming convention is to be used:

SAGAS_MIRNSTANDINGDATA_OriginatorID_RecipientID_CCYYMMDDHHmmSS

Transaction 1000		
Heading/Column designator	Mandatory / Optional	Comment
NMI	M	Must be present
NMI_Checksum	M	Must be present
Distribution_Tariff	O	Required if meter is attached
Transmission_Zone	O	
Heating_Value_Zone	O	
Customer_Characterisation	O	Required if basic meter attached
Customer_Classification_Code	O	Required if provided by Retailer
Customer_Threshold_Code	O	
MIRN_Status	O	
Meter_Serial_Number	O	Required if meter is attached
Pressure_Correction_Factor	O	Required if meter is attached
Meter_Status	O	Required if meter is attached
Supply_Point_Code	O	Required if meter is attached
Current_Read_Date	O	Required if Basic Meter is attached.
Next_Scheduled_Read_Date	O	Required if Basic Meter is attached.
Meter_Read_Frequency	O	Required if Basic Meter is attached.
Next_Scheduled_Special_Read_Date	O	Optional if Basic Meter is attached. Populated if there is a Special Read appointment booked against this MIRN.
Communication_Equipment_Present	O	Required if Interval Meter is attached.
Excluded_Services_Charges_Charge_Item_Category	O	Only used for Interval meters. This information may be provided in a subsequent NMIDiscoveryResponse message if the AdditionalDataToFollow element is set to “true”.
Excluded_Services_Charges_Charge_Item_Amount	O	Only used for Interval meters. This information may be provided in a subsequent NMIDiscoveryResponse message if the AdditionalDataToFollow element is set to “true”.
Excluded_Services_Charges_Charge_Item_Expiry_Date	O	Only used for Interval meters.

Transaction 1000		
Heading/Column designator	Mandatory / Optional	Comment
		This information may be provided in a subsequent NMIDiscoveryResponse message if the AdditionalDataToFollow element is set to "true".

Note: The Address, AdditionalDataToFollow and Event elements has not been replicated in T1000 from the original aseXML transaction T281.

5. Account Creation (T1005)

In order for the designated RoLR(s) to manage the customer set up following a RoLR event, the network operator is to provide to the designated RoLR(s) the standing data details for MIRNs which the designated RoLR(s) has become the current user for during the RoLR event. Network Operator provide this in the CSV format outlined below.

This will be based on the MIRNs provided to the network operator in the T980.

The method of data delivery will be via an agreed method between parties and not via the FRC hub.

The following file naming convention is to be used:

SAGAS_ACCOUNTCREATION_OriginatorID_RecipientID_CCYYMMDDHHmmSS

Transaction 1005		
Heading/Column designator	Mandatory/ Optional	Comment
NMI	M	Must be present
NMI_Checksum	M	Must be present
Meter_Serial_Number	M	
Meter_Type_Size_Code	M	
Current_Index_Value	M	
Current_Read_Date	M	
Scheduled_Reading_Day_Number	M	
Access_Details	O	Optional data that will be provided if available
Melway_Grid_Reference	O	Optional data that will be provided if available
Meter_Position	O	Optional data that will be provided if available

6. Customer and Site Details from FRB to RoLR (T1010)

In order to manage the 'transfer' and customer set up following a RoLR event, the failed retailer is to provide to the designated RoLR(s) a list of MIRNS and associated details for which they are the current user at the time of the RoLR event. Failed Retailer is to provide this in the CSV format outlined below.

The trigger for this data delivery will be the AER RoLR Notice.

The method of data delivery will be via an agreed method between parties and not via the FRC hub.

The following file naming convention is to be used:

SAGAS_CUSTOMERSITEDETAILSFRB_OriginatorID_RecipientID_CCYYMMDDHHmmSS

Transaction 1010		
Heading/Column designator	Mandatory / Optional	Comment
NMI	M	Must be present
NMI_Checksum	M	Must be present
Person_Name_Title	O	Contains customer's title
Person_Name_Given	O	Contains customer's first name
Person_Name_Family	O	Contains customer's surname if Business-Name is not populated
Business_Name	O	Contains company or business name, required if Person_Name_Family is not populated
Building_OrProperty_Name_1	O	Defines the building or Property name as per the Australian Standard AS4590
Building_OrProperty_Name_2	O	Defines the building or Property name as per the Australian Standard AS4590
ContactDetail_PersonName	O	Contains contact's mailing name or company name
Flat_Or_Unit_Type	O	
Flat_Or_Unit_Number	O	
Floor_Or_Level_Type	O	
Floor_Or_Level_Number	O	
Location_Description	O	
House_Number_1	O	
House_Number_2	O	
House_Number_Suffix_1	O	

Transaction 1010		
Heading/Column designator	Mandatory / Optional	Comment
House_Number_Suffix_2	O	
Lot_Number	O	
Street_Name_1	M	
Street_Name_2	O	
Street_Type_1	M	
Street_Type_2	O	
Street_Suffix_1	O	
Street_Suffix_2	O	
Site_Address_City	M	
Site_Address_State	M	
Site_Address_Postcode	M	
Mail_Address_Line_1	O	Contains formatted postal address details
Mail_Address_Line_2	O	Contains formatted postal address details
Mail_Address_Line_3	O	Contains formatted postal address details
Suburb_Or_Place_Or_Locality	O	Contains formatted postal address details
State_Or_Territory	O	Contains formatted postal address details
Postcode	O	Contains formatted postal address details
ContactDetail_PhoneNumber_1	O	Contains contact's primary phone number
ContactDetail_PhoneNumber_2	O	Contains contact's secondary phone number
Rebate_Code	O	Nil
Pensioner_Or_HealthCare_CardNumber	O	10 –string - Nine Numeric and one alpha unique identifier as issued by the Dept. of Social Security or Veterans' Affairs
From_Date	O	Effective date at which the card is valid
To_Date	O	Date at which the card expires
Date_Of_Birth	O	Customer's date of Birth
Customer_Identification	O	Contains Customer's Driver's license

Transaction 1010		
Heading/Column designator	Mandatory / Optional	Comment
RoLR	M	Default RoLR

7. Wholesale Market Data

AEMO will provide the designated RoLR(s) information in order for their business to complete its Wholesale Market nominations. This is specified in the STTM MIS Report Specification.

8. List of Cancelled Service Orders (T1050)

This data can be delivered by the network operator to the designated RoLR via an agreed method between the parties. If delivery is via e-mail then the standard format is to apply.

The following service order codes eligible for Network Operator cancellation in a RoLR event are: MAP; MRC; MRF; MRT; OTH; RSR; UMS; USR; AML; DSD and MHA. All other service orders must be actioned as per business as usual processes.

Below is an example if Envestra is sending the file:

E-mail address:

Subject Line:

"SAGAS_ SERVICE_ORDERS_INFLIGHT_ENVESTRA_20080730131500"

CSV Attachment:

Header (note: to be included in first row):

Transaction 1050		
Heading/Column designator	Mandatory / Optional	Comment
NMI	M	Must be present
NMI_Checksum	M	Must be present
Job Enquiry Code	M	
Flat_Or_Unit_Type	O	
Flat_Or_Unit_Number	O	
Floor_Or_Level_Type	O	
Floor_Or_Level_Number	O	
Location_Description	O	
House_Number_1	O	

Transaction 1050		
Heading/Column designator	Mandatory / Optional	Comment
House_Number_2	O	
House_Number_Suffix_1	O	
House_Number_Suffix_2	O	
Lot_Number	O	
Street_Name_1	M	
Street_Name_2	O	
Street_Type_1	M	
Street_Type_2	O	
Street_Suffix_1	O	
Street_Suffix_2	O	
Site_Address_City	M	
Site_Address_State	M	
Site_Address_Postcode	M	
Postcode		Contains formatted postal address details
Special Job Instructions	M	

9. List of AEMO Meter Fixes (T1060)

After a RoLR event has occurred, AEMO will provide the designated RoLR(s) meter fix information. AEMO will provide this in CSV format to the designated RoLR..

The method of file delivery is FTP from the GRMS.

The following naming convention is to be used:
SAGAS_LISTOFAEMOMETERFIXES_OriginatorID_RecipientID_CCYYMMDDHHmmSS

CSV HEADER ROW	CONTENT
MIRN	The MIRN.
checksum	The MIRN checksum.
Baseload	The Baseload – if not applicable, “NULL”

Temperature_Sensitivity_Factor	The temperature sensitivity factor - if not applicable, "NULL".
Network_Id	The SA sub-network id.
MIRN_Status	Can be either "Commissioned" or "Decommissioned".
Party	Current user's GBOID.
(1) Role	(2) "USER" is the only value to be accepted with this transaction.
Date_Service_Order_Completed	The date the service order was completed on.

10. RoLR CATS Accelerated and Cancelled MIRNs (T1070)

After a RoLR event has occurred, AEMO will provide the network operator, current user and new user a list of accelerated transfers. AEMO will provide this in CSV format.

The method of file delivery is FTP from the GRMS.

The following naming convention is to be used:

SAGAS_ACCELERATEDTRANSFERS_OriginatorID_RecipientID_CCYYMMDDHHmmSS

CSV HEADER ROW	CONTENT
Change_Id	Change request Id
MIRN	The MIRN
checksum	The MIRN checksum.
Change_Reason_Code	Identify the reason for the change. Possible values are: 0001 Prospective in situ: where a customer changes retailer without moving premises. 0002 Prospective move in: when a customer remains with the same retailer but changes address (supply point) to one currently belonging to another retailer. This can also apply to a new customer occupying a supply point currently registered to another retailer or even when the supply point is a

	new one. There is no objection to a move in. 0003 Correction of Transfer: to correct mistakes that may have occurred in the past
Change_Status	The current status of the change request
Actual_Change_Date	Date on which the Customer Transfer is required
Actual_End_Date	In relation to a transfer request which nominates a retrospective transfer date as the proposed transfer date
Role_Name_Accelerated_transfers	This is the role in the transfer played by the recipient of this report. Possible values are: NO: Network Operator USER C: Current User USER N: New User
New_Fro	Contains the initiator of the Change Request only when sent to New User and Network Operator